CENTRAL CONNECTICUT REGIONAL PLANNING AGENCY

Serving Berlin, Bristol, Burlington, New Britain, Plainville, Plymouth, and Southington

225 North Main Street, Suite 304
Bristol, CT 06010-4993

Internet: http://ccrpa.org
Fax/TDD: (860) 589-6950

Tel: (860) 589-7820
or (860) 224-9888

TO:	REGIONAL PLAN COMMITTEE
FROM:	Timothy Malone, Senior Planner
DATE:	January 30, 2014
RECEIVED BY CCRPA ON:	January 28, 2014
REFERRAL NAME:	Cheshire Zoning Regulation Amendments
INITIATOR:	Town of Cheshire
MUNICIPAL HEARING:	February 24, 2014
REFERRED TO:	CCRPA
DESCRIPTION:	The Town of Cheshire is proposing amendments related to recreation facilities. The amendments add definitions of "passive" and "active" recreation. The amendments also add height limits to municipal recreation facilities. They are to be increased by a maximum of 60 feet on the condition that 2 feet of additional setback is added for every foot of additional height. A special permit is required.
COMMENTS:	No comments were received.
STAFF RECOMMENDATION:	CCRPA recommends that the referral in this proposal be found ***not in Conflict*** with the Regional Plan of Conservation and Development or any other agency plan

ev. 2/92, 1/95, 11/95
5/01, 7/01, 10/02, 11/03, 07/04, 3/06,1/10

PETITION FOR A ZONE MAP OR ZONE TEXT CHANGE

In accordance with the General Statutes of the State of Connecticut, the undersigned hereby petitions the Cheshire Planning & Zoning Commission for a text change (**X**) and/or map change ( ) to the Cheshire Zoning Regulations to permit, amend, or delete the following:

For Zone Text Changes:

Indicate pertinent section/paragraph of Zoning Regulation to be changed.

Section 23, Definitions –Recreation Active- and Recreation, Passive

Section 30, Schedule A, Permitted Uses, Item 29A

NEW: Section 32, Schedule B, Item 7

For Zone Map Changes:

Location of Property:_____

Assessor's Map No.(s)_____

Lot No.(s)_____ Zone _____

Change from present_____zone to _____ zone.

Reason for Proposed Text and/~~or Map~~ Change: To amend Regulations

Regarding Maximum Height for Municipal Recreational Facilities

The following is attached and hereby made part of this petition:

1. For a text change, five (5) copies of the existing and proposed text.

2. For a map change, six (6) copies of a written legal description of the proposed zone boundary and nine (6) copies of a map drawn to a scale of not less than 200 feet to the inch, covering the area of the proposed change, and all areas in the Town within 500 feet of the proposed change, and showing for such area the existing and proposed zoning district boundary lines, the existing property lines, and the names and addresses of the current property owners as indicated by the Cheshire Assessor's records.

3. For a map change, the applicant must submit an **affidavit at least ten (10) days** before the hearing stating that notification has been sent to all abutting property owners (including those across the street). The affidavit shall confirm that the notice was mailed at least **fifteen (15) days prior to the hearing and shall list the names, property addresses and mailing addresses,** if different from property addresses. Notification to property owners shall be in the form of letter or postcard and shall specify the date, time, and place of the public hearing.

4. A base fee of $560.00* and a Public Hearing Fee of $175.00 is payable by check to "Collector, Town of Cheshire" in the amount of $735.00.

*This includes a $60.00 State of Connecticut Fee.

****

Petitioner's Name Town of Cheshire Connecticut
(Print or Type)

Petitioner's Address 84 South Main Street, Cheshire, CT 06410

Petitioner's Signature Michael A. Milone
By: Michael A. Milone, Town Manager

Telephone Number 203-271-6670 FAX # 203-271-6688

Owner's Name Town of Cheshire Connecticut
(Print or Type)

Owner's Signature Michael A. Milone
By: Michael A. Milone, Town Manager

Agent, if other than applicant, to be contacted with regard to this application.

Name_____

Address_____

Telephone Number_____ FAX #_____

****

This application must be filed in the Planning Office at least seven (7) days prior to the regular Planning & Zoning Commission meeting date.

Disclaimer: Additional information may be required, please contact the Planning office for complete application packets.

Proposed Amendments to the Cheshire Zoning Regulations Regarding Maximum Height for Municipal Recreational Facilities

Amendments to Section 23, Definitions:

Recreation, Active: Recreational activities usually performed with others, often requiring equipment and taking place at developed places, sites or fields. Active recreation includes but is not limited to swimming, tennis, court games, baseball, soccer and other field sports, and playground activities.

Recreation, Passive: Recreational activities that do not require a developed site, generally including such activities as hiking, horseback riding, picnicking, and similar activities.

Amendment to Section 30, Schedule A, Permitted Uses, Item 29A:

Municipal Buildings and Uses of the Town of Cheshire and other governmental uses. All such uses shall be subject to the Dimensional Requirements set forth in Section 32 of these regulations, except as may be noted therein.

New Section 32, Schedule B, Item 7:

7. The height for active municipal recreational facilities may be increased to a maximum of 60 feet, provided there are 2 feet of additional setback for every 1 foot of additional height. Any such modification shall only be granted by Special Permit in accordance with Section 40 of these regulations.

RECEIVED
JAN 30 2014

PLANNING DEPARTMENT
TOWN OF CHESHIRE
84 SOUTH MAIN STREET
CHESHIRE, CT 06410

TOWN OF CHESHIRE
MEMORANDUM

Phone 203-271-6670 - Fax 203-271-6688

Date: January 29, 2014

FROM: William S. Voelker, AICP, Town Planner

SUBJECT: Regional Referrals

The Cheshire Planning Office has received the following application (s) and we are forwarding such application(s) for regional referral:

TYPE OF APPLICATION	SCHEDULED DATE OF PUBLIC HEARING IF APPLICABLE
Zone Text Amendment Town of Cheshire Section 23, Definitions – to add Recreation Active: Recreation Passive	Public Hearing – Feb. 24, 2014 7:30 p.m. – Cheshire Town Hall

Section 30, Schedule A, Permitted Uses, Item 29A

And New Section 32, Schedule B, Item 7
#7 The height for active municipal recreational facilities…

Existing and Proposed attached

If further information is required, please contact me at the Planning Office at (203) 271-6670. We look forward to receiving your comments.

Distribution List:
COG Central Naugatuck Valley
Central CT Regional Planning Agency
South Central CT RPA

Personal Services Businesses:

Businesses providing nonmedical related services, including beauty and barber shops, clothing rental, dry cleaning stores, self-service laundries, psychic readers, shoe repair shops, tanning salons, health and exercise facilities, pet grooming establishments, and similar uses. These uses may also include accessory retail sales of products related to the services provided.[5]

Pickup Coach:

A structure designed primarily to be mounted on a pickup or truck chassis and with sufficient equipment to render it suitable for use as a temporary dwelling for travel, recreational and vacation uses.[2]

Planned Residential Development:

A residential development controlled by a single person or corporation, of a single tract of land or a number of contiguous lots, for five or more dwelling unit.

Planned Residential Development Designed Exclusively for Occupancy by the Elderly:

Shall mean developments of dwelling units

1) designed exclusively to be occupied by and to meet the specific requirements and design standards suitable for occupancy by one or more elderly persons at least one of whom is sixty-two (62) years of age or over, and
2) which conform to the requirements of State and/or Federal programs providing for housing for the elderly and shall include a signed and sealed certified statement from the owner, his architect, and engineers that such housing conforms to the State and/or Federal Agencies' program requirements for elderly housing whether or not such housing is constructed under such program.[1]

Private Usable Outdoor Space:

Outdoor space directly accessible by the occupants of a dwelling unit, adequately screened from adjacent spaces and common land so as to provide privacy for the users thereof.

Professional and Business Offices:

Offices of doctors, dentists, attorneys, real estate agents, insurance agents, accountants, brokers, engineers, architects, landscape architects, studios of artists, photographers, musicians, offices for data processing, telephone answering services, and the like.

Public Service Corporation Buildings and Facilities:

Privately owned buildings and facilities intended to serve the public interest but are proprietary in nature. Such uses may include, but are not limited to, community water supply wells and reservoirs, well houses, water towers, telephone and power stations.[3]

Retail:

Sales of goods or services (other than professional services) to the general public. This definition shall include 'wholesale membership clubs' whose membership exceeds one hundred (100)members.[4]

EXISTING

---

[1] Amendment effective March 16, 1973
2 Amendment effective February 27, 1975
3 Amendment effective September 17, 1979
4 Amendment effective November 1, 2002
5Amendment effective May 14, 2010

PLANNING DEPARTMENT
TOWN OF CHESHIRE
84 SOUTH MAIN STREET
CHESHIRE, CT 06410

PROPOSED

Add – **Recreation Active**:

Recreational activities usually performed with others, often requiring equipment and taking place at developed places, sites or fields. Active recreation includes but is not limited to swimming, tennis, court games, baseball, soccer and other field sports, and playground activities.

Add – **Recreation Passive:**

Recreational activities that do not require a developed site, generally including such activities as hiking, horseback riding, picnicking, and similar activities.

Retail:

Sales of goods or services (other than professional services) to the general public. This definition shall include 'wholesale membership clubs' whose membership exceeds one hundred (100) members.4

PLANNING DEPARTMENT
TOWN OF CHESHIRE
84 SOUTH MAIN STREET
CHESHIRE, CT 06410

EXISTING

SECTION 30, SCHEDULE A, PERMITTED USES

	PERMITTED USES	ZONING DISTRICTS								
		R-80	R-40	R-20	R-20A	C-1	C-2	C-3	I-1	I-2
29A.	Municipal Buildings and Uses of the Town of Cheshire and other governmental uses.[1]	P	P	P	P	P	P	P	P	P
29B.	Uses otherwise permitted in Section 30, Schedule A., PERMITTED USES, the operation of which is conducted by private enterprise or a non-profit entity, is directly related to a municipal, governmental, or educational use, and is to be operated on property owned by the Town of Cheshire subject to approval by the Town Council of the Town of Cheshire. Nothing contained herein shall preclude the utilization of the facility for the approved use by private or non-profit entities in conjunction with or in addition to the utilization of the approved facility by the Town of Cheshire.[2]	P	P	P	P	P	P	P	P	P
30.	Parks and playgrounds, historic landmarks, and the like, operated by a private or governmental unit or a community association.	P	P	P	P	P	P	P	P	P
31.	Carnivals or fairs sponsored by a local nonprofit organization, subject to the following conditions: a. The facility shall be on a lot having a minimum area of 3 acres. b. There shall be provision for adequate parking within 500 feet of the facility. c. All structures shall be a minimum of 150 feet from any lot line. d. Direct access shall be on lands adjacent to State Highway Routes 10 or 70. [3]e. Signage must comply with Section 34, Signs. f. There shall be no more than one special permit issued to an organization during any one calendar year. The duration shall be for no more than 10 consecutive calendar days. g. Subsequent yearly events sponsored by the same organization and located on the same site may be approved administratively by the Planning Staff.	N	P	P	P	P	P	P	P	P

1 Amendment effective September 17, 1979.

2 Amendment effective November 1, 2996.

3 Amendment effective July 30, 2004.

PLANNING DEPARTMENT
TOWN OF CHESHIRE
84 SOUTH MAIN STREET
CHESHIRE, CT 06410

PROPOSED

SECTION 30, SCHEDULE A, PERMITTED USES

PERMITTED USES		ZONING DISTRICTS								
		R-80	R-40	R-20	R-20A	C-1	C-2	C-3	I-1	I-2
29A.	Municipal Buildings and Uses of the Town of Cheshire and other governmental uses.[1] ***All such uses shall be subject to the Dimensional Requirements set forth in Section 32 of these regulations, except as may be noted therein.***[2]	P P	P P	P P	P P	P P	P P	P P	P P	P P
29B.	Uses otherwise permitted in Section 30, Schedule A., PERMITTED USES, the operation of which is conducted by private enterprise or a non-profit entity, is directly related to a municipal, governmental, or educational use, and is to be operated on property owned by the Town of Cheshire subject to approval by the Town Council of the Town of Cheshire. Nothing contained herein shall preclude the utilization of the facility for the approved use by private or non-profit entities in conjunction with or in addition to the utilization of the approved facility by the Town of Cheshire.[3]									

PLANNING DEPARTMENT
TOWN OF CHESHIRE
84 SOUTH MAIN STREET
CHESHIRE, CT 06410

EXISTING

SECTION 32 SCHEDULE B DIMENSIONAL REQUIREMENTS

ADDITIONAL INFORMATION

1. Dwelling constructed after the effective date of these Regulations under paragraphs 1 through 4 of Section 30, Schedule A, containing less than two garage spaces per unit, shall increase the appropriate setback requirement, as determined by the Zoning Enforcement Officer, by a minimum of 11 feet for each garage space less than 2 per unit.

*2. Maximum height of structure may be up to 65 feet but only if all setback requirements are increased by 2 feet for each 1 foot of structure height over 50 feet.

3.[1] On a corner lot, or a lot fronting on more than one street, setback requirements from both street lines shall be maintained. The owner shall designate one line, not a street line, to be the rear line. This line shall be the line opposite the front door, if practical. Once such line is designated, it shall thereafter be the rear line and shall not be changed. The remaining line shall be considered a side line, and shall meet the applicable side line setback requirements for that zone.

**4.[2] Parking shall be located in the rear of the building wherever possible and the building shall be residential in character.

5.[3] The easement line of an "unobstructed easement of access" shall not be considered a "street line" for purposes of this section.

6.[4] The Planning and Zoning Commission may modify the requirements of Section 32, Schedule B and Section 33 in whole or in part where a proposed industrial or commercial development involves multiple properties and is to be maintained as a single project. Any such modification shall only be granted by Special Permit in accordance with Section 40 of these regulations. The modifications under this paragraph may include the following:

a. Waiving the setback requirements *between* the properties;
b. Treating the entire site as a unit in determining minimum lot area, width or frontage, maximum lot coverage and the parking requirements of Section 33.

This paragraph does not permit the waiving of maximum structure heights or maximum lot coverage, nor the setback requirements for the entire perimeter of the site treated as a unit.

In considering such change, the Commission shall be guided by the following:

a. Traffic circulation and access management including the location amount and access to parking, traffic load or possible circulation problems on existing streets.
b. The height and floor area of buildings in relation to other structures in the vicinity.
c. The location of main and accessory buildings in relation to one another.
d. Location of signs and lighting, loading zones, and landscaping.
e. Safeguards to protect adjacent property and the neighborhood in general from detriment.

[1] Amendment effective August 31, 1979.
[2] Amendment effective July 2, 2004
[3] Amendment effective January 27, 1989.
[4] Amendment effective March 2, 2007

PROPOSED

SECTION 32 SCHEDULE B DIMENSIONAL REQUIREMENTS FOOTNOTES

1. Dwelling constructed after the effective date of these Regulations under paragraphs 1 through 4 of Section 30, Schedule A, containing less than two garage spaces per unit, shall increase the appropriate setback requirement, as determined by the Zoning Enforcement Officer, by a minimum of 11 feet for each garage space less than 2 per unit.

*2. Maximum height of structure may be up to 65 feet but only if all setback requirements are increased by 2 feet for each 1 foot of structure height over 50 feet.

3.[1] On a corner lot, or a lot fronting on more than one street, setback requirements from both street lines shall be maintained. The owner shall designate one line, not a street line, to be the rear line. This line shall be the line opposite the front door, if practical. Once such line is designated, it shall thereafter be the rear line and shall not be changed. The remaining line shall be considered a side line, and shall meet the applicable side line setback requirements for that zone.

**4.[2] Parking shall be located in the rear of the building wherever possible and the building shall be residential in character.

Single family residences in the R-20A zone shall not exceed 15% lot coverage.

5.[3] The easement line of an "unobstructed easement of access" shall not be considered a "street line" for purposes of this section.

6.[1] The Planning and Zoning Commission may modify the requirements of Section 32, Schedule B and Section 33 in whole or in part where a proposed industrial or commercial development involves multiple properties and is to be maintained as a single project. Any such modification shall only be granted by Special Permit in accordance with Section 40 of these regulations. The modifications under this paragraph may include the following:

a. Waiving the setback requirements ***between*** the properties;
b. Treating the entire site as a unit in determining minimum lot area, width or frontage, maximum lot coverage and the parking requirements of Section 33.

This paragraph does not permit the waiving of maximum structure heights <u>or maximum lot coverage</u>, nor the setback requirements for the entire <u>perimeter of the site treated as a unit.</u>

In considering such change, the Commission shall be guided by the following:

a. Traffic circulation and access management including the location amount and access to parking, traffic load or possible circulation problems on existing streets.
b. The height and floor area of buildings in relation to other structures in the vicinity.
c. The location of main and accessory buildings in relation to one another.
d. Location of signs and lighting, loading zones, and landscaping.
e. Safeguards to protect adjacent property and the neighborhood in general from detrigment.

7. ***The height for active municipal recreational facilities may be increased to a maximum of 60 feet, provided there are 2 feet of additional setback for every 1 foot of additional height. Any such modification shall only be granted by Special Permit in accordance with Section 40 of these regulations.***[4]

---

[1] Amendment effective August 31, 1979.
[2] Amendment effective September 27, 1985.
[3] Amendment effective January 27, 1989.
[1] Amendment effective March 2, 2007

PLANNING DEPARTMENT
TOWN OF CHESHIRE
84 SOUTH MAIN STREET
CHESHIRE, CT 06410

CENTRAL CONNECTICUT REGIONAL PLANNING AGENCY

Serving Berlin, Bristol, Burlington, New Britain, Plainville, Plymouth, and Southington

225 North Main Street, Suite 304
Bristol, CT 06010-4993

Internet: http://ccrpa.org
Fax/TDD: (860) 589-6950

Tel: (860) 589-7820
or (860) 224-9888

TO:	REGIONAL PLAN COMMITTEE
FROM:	Timothy Malone, Senior Planner
DATE:	January 30, 2014
RECEIVED BY CCRPA ON:	January 28, 2014
REFERRAL NAME:	Meriden Zoning Regulation Amendments
INITIATOR:	City of Meriden
MUNICIPAL HEARING:	February 19, 2014
REFERRED TO:	CCRPA
DESCRIPTION:	Following a previous change to Meriden's zoning regulations that established a Transit Oriented Development District (TOD) that was intended to replace the Central Commercial Design District (CCDD), the City of Meriden is proposing changes that replace references to the CCDD with TOD and permits establishes to serve liquor in the TOD zone. Distance restrictions normally required for liquor-serving establishments (such as restaurants and bars) are also eliminated in the TOD zone, upon approval of a Special Permit from the Planning Commission.
COMMENTS:	No comments were received.
STAFF RECOMMENDATION:	CCRPA recommends that the referral in this proposal be found ***not in Conflict*** with the Regional Plan of Conservation and Development or any other agency plan

City of Meriden, Connecticut

Office of the City Council

RECEIVED JAN 2 3 2014

142 EAST MAIN STREET
MERIDEN, CONNECTICUT 06450-8022
TELEPHONE: (203)630-4125
FAX: (203)639-7008

January 17, 2014

Council of Governments of Central Naugatuck Valley
60 North Main Street, 3rd Floor
Waterbury, CT 06702

Central CT Regional Planning Agency
255 North Main Street, Suite 304
Bristol, CT 06010

Mid-State Regional Planning Agency
P.O. Box 139
Middletown, CT 06457

South Central Regional Council
127 Washington Avenue, 4th Floor West
New Haven, CT 06473

Dear Regional Planning Agency:

Per State Statutes, the City of Meriden hereby refers the following proposed zoning amendment for your review and comment. Enclosed please find the legal notice and resolution for the following:

1. Item #MNO20 of 12/16/13: Res. re: Amend zoning regulations Sections 213-51 and 213-8 shown on "PROPOSED ZONING AMENDMENTS TO ELIMINATE REFERENCES TO CCDD, ADD REFERENCES TO TOD DISTRICTS" AND PERMIT LIQUOR IN TOD DISTRICTS".

Thank you for your consideration.

Respectfully,

Brian P. Daniels/lm

Brian P. Daniels
Chairman, Economic Development, Housing & Zoning

BPD/lnc
Enc.
cc: Dominick Caruso, Director of Development & Enforcement
File: Regional Planning Letters

LEGAL NOTICE

Special Economic Development, Housing & Zoning Committee
Meriden City Council

The Economic Development, Housing & Zoning Committee of the Meriden City Council will hold a special public hearing on Wednesday, February 19th, 2014 at 6:00 p.m. at City Hall in the City Council Chambers, Room 206, 142 East Main Street, Meriden, CT to consider the following:

1. Item #MNO20 of 12/16/13: Res. re: Amend zoning regulations Sections 213-51 and 213-8 shown on "PROPOSED ZONING AMENDMENTS TO ELIMINATE REFERENCES TO CCDD, ADD REFERENCES TO TOD DISTRICTS" AND PERMIT LIQUOR IN TOD DISTRICTS".

At this hearing, all interested parties may appear and be heard and written communications will be received. The text of the resolution is on file for public review in the City Clerk's Office, Room 214, City Hall.

Brian P. Daniels

Brian P. Daniels, Chairman

TO BE PUBLISHED: FEBRUARY 7TH AND FEBURARY 14TH, 2014

MNO #20
DATE: 12/16/13

RESOLUTION

CITY CLERK
MERIDEN, CONN.

2013 DEC 13 PM 2:16

Presented by: _____
Councilor Brian Daniels

Irene A. Grasso

Whereas, the City Council at a meeting in June, 2013 approved amendments to zoning for a Transit Oriented Development (TOD) Zone to promote revitalization of the downtown; and

Whereas, TOD zoning intends to promote expansion of commercial uses in the downtown, including establishments that serve liquor; and

Whereas, Zoning Sections 213-51 Sale of Alcoholic Liquor and 213-8 Establishment of Districts, need to be updated to delete references to the former CCDD District and add references to appropriate TOD Sub-districts to identify where establishments serving alcoholic liquor are allowed to locate, without separation distances; now, therefore,

Be It Resolved, by this City Council that the Council acting as the Zoning Authority for the City of Meriden amend the Zoning Regulations Sections 213-51 and 213-8 as shown on: "PROPOSED ZONING AMENDMENTS TO ELIMINATE REFERENCES TO CCDD, ADD REFERENCES TO TOD DISTRICTS, AND PERMIT LIQUOR IN THE TOD DISTRICTS".

_____

PROPOSED ZONING AMENDMENTS TO ELIMINATE REFERENCES TO CCDD, ADD REFERENCES TO TOD DISTRICTS, AND PERMIT LIQUOR IN THE TOD DISTRICTS

12/13/13

Note: proposed additional text is bolded, deletions are shown with strikeout

1. Amend § 213-8. Establishment of districts.

   Delete: ~~CCDD Central Commercial Design District~~

   Add: **Transit Oriented Development Sub-Districts:**

TOD-HC	**TOD Historic Commercial**
TOD-P	**TOD Park**
TOD-H	**TOD Hanover**
TOD-C	**TOD Civic**
TOD-G	**TOD Gateway**

2. Amend § 213-51. Sale of alcoholic liquor.

   A. The sale of alcoholic liquor...shall be permitted only in the following districts, as established by § 213-8 of this chapter:

   Add:

(7)	**TOD-HC**	**TOD Historic Commercial**
(8)	**TOD-P**	**TOD Park**
(9)	**TOD-H**	**TOD Hanover (on Primary and Secondary Streets)**
(10)	**TOD-G**	**TOD Gateway (on Primary and Secondary Streets)**

   D. Within the ~~CCDD~~ **TOD** area **that liquor is permitted,** the distance set forth in Subsection C above be reduced to zero **for Restaurants and also Bars or Nightclubs that obtain a Special Permit from the Planning Commission.**

   H. The distance restrictions contained in this section shall not apply to the sale of alcoholic liquor at retail under a club permit...for consumption on the premises, and such clubs may be permitted as a special exception, only in the following districts...

   Add: **and may be permitted by a special permit from the Planning Commission in the following districts:**

   (6) TOD Sub-Districts that permit liquor

   J. The sale of beer and wine only...only in the following districts as established by § 213-8 of these regulations:

   Delete: ~~CCDD~~

CENTRAL CONNECTICUT REGIONAL PLANNING AGENCY

Serving Berlin, Bristol, Burlington, New Britain, Plainville, Plymouth, and Southington

225 North Main Street, Suite 304
Bristol, CT 06010-4993

Internet: http://ccrpa.org
Fax/TDD: (860) 589-6950

Tel: (860) 589-7820
or (860) 224-9888

TO:	REGIONAL PLAN COMMITTEE
FROM:	Timothy Malone, Senior Planner
DATE:	January 30, 2014
RECEIVED BY CCRPA ON:	January 10, 2014
REFERRAL NAME:	Newington Zoning Regulation Amendments
INITIATOR:	Town of Newington
MUNICIPAL HEARING:	February 12, 2014
REFERRED TO:	CCRPA
DESCRIPTION:	The Town of Newington is proposing the addition of Low Impact Development Regulations to their zoning regulations. The regulations affect residential properties that will add 300 square feet of impervious surface cover and any other development that will result in increased impervious surface cover. Such developments will have to demonstrate compliance with Newington's LID manual.
COMMENTS:	No comments were received.
STAFF RECOMMENDATION:	CCRPA recommends that the referral in this proposal be found ***not in Conflict*** with the Regional Plan of Conservation and Development or any other agency plan

NEWINGTON – Low Impact Development Strategies

Recommended Zoning Regulation Changes

Zoning Regulations

1

Definitions

The following definitions are recommended for insertion into Section 9.2 of the Zoning Regulations (Definitions). Deletions are shown as red "strike through" text (e.g. ~~deletion~~) and insertions are shown as red underlined text (e.g. insertion).

IMPERVIOUS SURFACE – Any material or structure on or above the ground that prevents water from infiltrating through to the underlying soil. Impervious surfaces include paved parking lots, rooftops, driveways, patios (i.e., solid or open-joint patios or decks with an underlying impervious surface), paved roads, water surfaces (i.e., pools, ponds, fountains, etc.), and highly compacted soils. Impervious surfaces exclude permeable pavement that is designed, constructed, and maintained to allow stormwater to drain through the surface, including porous asphalt, porous concrete, permeable interlocking concrete pavers, concrete grid pavers, plastic turf reinforcing grids, and similar materials or products identified as "permeable" of "pervious" by the manufacturer, however these surfaces may be considered "impervious" by the Town when calculating a parcel's impervious coverage. An underground parking structure shall be considered an impervious surface if there is less than 3 feet of soil cover.

LOW IMPACT DEVELOPMENT TECHNIQUES – The application of site design and stormwater management (such as, but not limited to, infiltration of rainwater, treatment of stormwater runoff, and runoff attenuation) in order to mimic the hydrologic conditions associated with an undeveloped site. Such techniques may be found in the *Low Impact Development and Stormwater Manual for the Town of Newington* (2013, as amended), the *Connecticut Stormwater Quality Manual* (2004, as amended), the *Low Impact Development Appendix to the Connecticut Stormwater Quality Manual* (2011, a amended), or other sources acceptable to the Commission.

NEWINGTON – Low Impact Development Strategies

Recommended Zoning Regulation Changes

Zoning Regulations

2

*** NEW SECTION ***

Stormwater Management

The following ***new section*** of the Zoning Regulations is recommended in order to apply LID standards to all forms of development (at the present time, Section 7.4 only applies to uses required to get Site Plan Approval). Deletions are shown as red "strike through" text (e.g. ~~deletion~~) and insertions are shown as red underlined text (e.g. insertion).

SECTION 6 - SPECIAL REGULATIONS

Section 6.15 Stormwater Management

6.15.1 **Applicability** – Unless modified by the Commission, every application shall provide for a stormwater management system, including low impact development techniques, as specified in this section.

6.15.2 **Residential Lots** – Any new construction or development on a residential lot which increases the impervious surface area by 300 square feet or more shall demonstrate conformance with the "*LID Manual for Individual Residences in the Town of Newington.*"

6.15.3 **Other New Construction or Development** – Any other new construction or development resulting in increased impervious surface area shall demonstrate conformance with the applicable standards for stormwater management be as specified in Section 2.1 of the *Low Impact Development and Stormwater Manual for the Town of Newington*:

A. Standard 1 – Use of Low Impact Development to Reduce Stormwater Runoff and Pollutants (maximum extent practicable standard).

B. Standard 2 – Peak Flow Control and Flood Protection.

C. Standard 3 – Construction Erosion and Sediment Control.

D. Standard 4 – Operation and Maintenance.

E. Standard 5 – Redevelopment.

6.15.3 **Interior Renovation and Change of Use** – Interior renovation of an existing building and/or change of use within an existing building shall only be required to conform to Section 2.1 of the *Low Impact Development and Stormwater Manual for the Town of Newington* when:

A. Such interior renovation or change of use includes an increase in impervious surface area of 300 square feet or more, or

B. Such interior renovation or change of use results in a requirement for more parking spaces.

DRAFT

NEWINGTON – Low Impact Development Strategies

Recommended Zoning Regulation Changes

Zoning Regulations

3

Parking Regulations

Since parking regulations are a significant driver of impervious coverage, Newington should strive to have parking requirements which are efficient and practical. The following modifications are recommended to Section 6.1 of the Zoning Regulations (Parking Regulations). Deletions are shown as red "strike through" text (e.g. ~~deletion~~) and insertions are shown as red underlined text (e.g. insertion).

SECTION 6 - SPECIAL REGULATIONS

Section 6.1 Off-Street Parking and Loading Regulations

6.1.1 Parking

There shall be provided, at the time of application for a building permit for the erection, alteration, enlargement or change in use of any building or land for which off-street parking is required, a plan showing functional required parking space, including the means of access and interior circulation and landscaping.

A. **Area Requirements** - Area requirements for parking spaces and lots are specified in the Newington Site Plan Checklist. Handicapped accessible parking spaces shall be 15 feet wide with a cross hatch access aisle of 5 feet wide. Two accessible spaces may share a common aisle. The access aisle must connect directly to an accessible route. Accessible parking spaces must be the closest spaces to a building's or uses' accessible entrance. The required number of accessible spaces per total parking lot shall not be less than the standards set forth in the State Building Code. (Effective 12-01-01) Once painted or marked in accordance with the international symbol of accessibility the property owner shall be required to maintain such marked or painted spaces so that they are easily visible to a patron seeking accessible parking. The accessible parking spaces must be designated by a clearly visible sign mounted on a solid base or permanently fixed at the place marked with the symbol and legend "Handicapped Parking State Permit Required Violators Will be fined."

B. **Parking Spaces for Buildings Used for Residence** - At least two permanently maintained durable, adequately cleared and surfaced off-street parking spaces shall

be provided for every dwelling unit, except as otherwise stated in these regulations. All parking of vehicles shall be on the surfaced area not on the lawn. The surfaced area shall not exceed 50% of the front lawn, the area between the street line to the front exterior wall of the residence.. No vehicles shall park between the curb or edge of pavement and the boundary of the Town or State right of way. (Effective 8-15-07)

C. **Parking Spaces for All Other Uses** - Permanently maintained and appropriately~~, bituminous concrete or equal~~ surfaced (see Section 6.1.1.K below) off-street parking spaces shall be provided as follows:

	Minimum Required Parking Spaces	**Parking Threshold**
OFFICE-TYPE USES	**(may be pervious or impervious surface)**	**(unless modified by the Commission, any parking spaces installed above this threshold shall be pervious bituminous concrete. pervious concrete, or pervious pavers)**
Business offices, financial institutions	~~6~~ 5 spaces for each 1,000 square feet of gross ~~office~~ floor area	4 spaces for each 1,000 square feet of gross floor area
Business and professional offices located on upper floors	4 spaces for each 1,000 square feet of gross floor area	3 spaces for each 1,000 square feet of gross floor area
Medical and dental offices	~~7~~ 6 spaces for each 1,000 square feet of gross floor area	5 spaces for each 1,000 square feet of gross floor area
Corporate headquarters and office parks	~~6~~ 5 spaces for each 1,000 square feet of gross floor area up to 10,000 square feet Plus 4 ½ spaces for each 1,000 square feet of gross floor area between 10,000 and ~~up to~~ 50,000 square feet Plus 4 spaces for each 1,000 square feet of gross floor area over 50,000 square feet	4 spaces for each 1,000 square feet of gross floor area up to 10,000 square feet Plus 3 ½ spaces for each 1,000 square feet of gross floor area between 10,000 and 50,000 square feet Plus 3 spaces for each 1,000 square feet of gross floor area over 50,000 square feet

DRAFT

	Minimum Required Parking Spaces	Parking Threshold
RETAIL- AND SERVICE-TYPE USES	(may be pervious or impervious surface)	(unless modified by the Commission, any parking spaces installed above this threshold shall be pervious bituminous concrete. pervious concrete, or pervious pavers)
Retail stores, personal service shops	~~7~~ 5 spaces for each 1,000 square feet of gross floor area up to 10,000 square feet Plus ~~6~~ 4 ½ spaces for each 1,000 square feet of gross floor area between 10,000 and ~~up to~~ 50,000 square feet Plus ~~4 ½~~4 spaces for each 1,000 square feet of gross floor area over 50,000 square feet	4 spaces for each 1,000 square feet of gross floor area up to 10,000 square feet Plus 3 ½ spaces for each 1,000 square feet of gross floor area between 10,000 and 50,000 square feet Plus 3 spaces for each 1,000 square feet of gross floor area over 50,000 square feet
Shopping centers of not less than 50,000 square feet gross floor area	~~5~~ 4 spaces for each 1,000 square feet of gross floor area, irrespective of the particular uses ~~(Effective 7-1-2013)~~	4 spaces for each 1,000 square feet of gross floor area, irrespective of the particular uses
Eating establishments; taverns, cocktail lounges	20 spaces for each 1,000 square feet of floor area open to the public	20 spaces for each 1,000 square feet of floor area open to the public
Theaters, places of assembly, amusement, recreation and education	1 space for each 2 seats, or 1 space for each 3 persons based on fire marshal's rated capacity, whichever is greater. The Commission reserves the right to modify this standard for recreation uses	1 space for each 2 seats, or 1 space for each 3 persons based on fire marshal's rated capacity, whichever is greater. The Commission reserves the right to modify this standard for recreation uses
Hotel, motel, tourist home	1 space for every guest room, plus 1 for every two employees	¾ space for every guest room
Undertaking establishments	4 spaces for each 1,000 square feet of gross floor area	3 spaces for each 1,000 square feet of gross floor area

DRAFT

	Minimum Required Parking Spaces	Parking Threshold
RESIDENTIAL-TYPE USES	(may be pervious or impervious surface)	(unless modified by the Commission, any parking spaces installed above this threshold shall be pervious bituminous concrete. pervious concrete, or pervious pavers)
Apartments and housing within PD Zone	2 spaces per dwelling unit	2 spaces per dwelling unit
Apartments and housing units within B-TC Zone	1.5 spaces per dwelling unit	1.5 spaces per dwelling unit
Condominium and town house housing	2 spaces per dwelling unit	2 spaces per dwelling unit
Housing for the elderly	~~1~~ 0.5 spaces per ~~for each 2~~ dwelling unit~~s~~	n/a
Boarding and rooming house	1 space for each 2 guests or persons residing on premises	1 space for each 2 guests or persons residing on premises
Hospital, sanitarium, convalescent home or nursing home	1 space for every 3 beds, plus 1 for every 2 employee	1 space for every 3 beds, plus 1 for every 2 employee

DRAFT

	Minimum Required Parking Spaces	Parking Threshold
OTHER USES	(may be pervious or impervious surface)	(unless modified by the Commission, any parking spaces installed above this threshold shall be pervious bituminous concrete. pervious concrete, or pervious pavers)
Municipal parking lot	Any property which is a part of the Municipal Parking Lot will be permitted to use the 4 ½ spaces per 1,000 square foot gross floor area without regard to the business use of the building	n/a
Industrial, manufacturing, warehouse, and/or distribution	1 space per employee on the largest shift or 3 spaces per 1,000 square feet or whichever is more applicable as determined by the Commission.	As determined by the Commission.
Home occupations, office in residence (medical/dental)	5 spaces for each 1,000 square feet or fraction thereof of building floor area devoted to such use, but for medical/dental at least 5 spaces plus 1 for each doctor	As determined by the Commission.
Road side stands	3 minimum, plus dwelling lot requirements	As determined by the Commission.
Uses not listed	5 spaces for each 1,000 square feet of gross floor area, but the Commission may vary this requirement on application to it and for good cause shown per Section 6.1.1. J or the Commission may determine that the proposed use is similar to one of the uses listed above and apply the applicable standard.	As determined by the Commission.

DRAFT

FIGURE 2

TYPICAL PARKING LOT LAYOUT DESIGNS

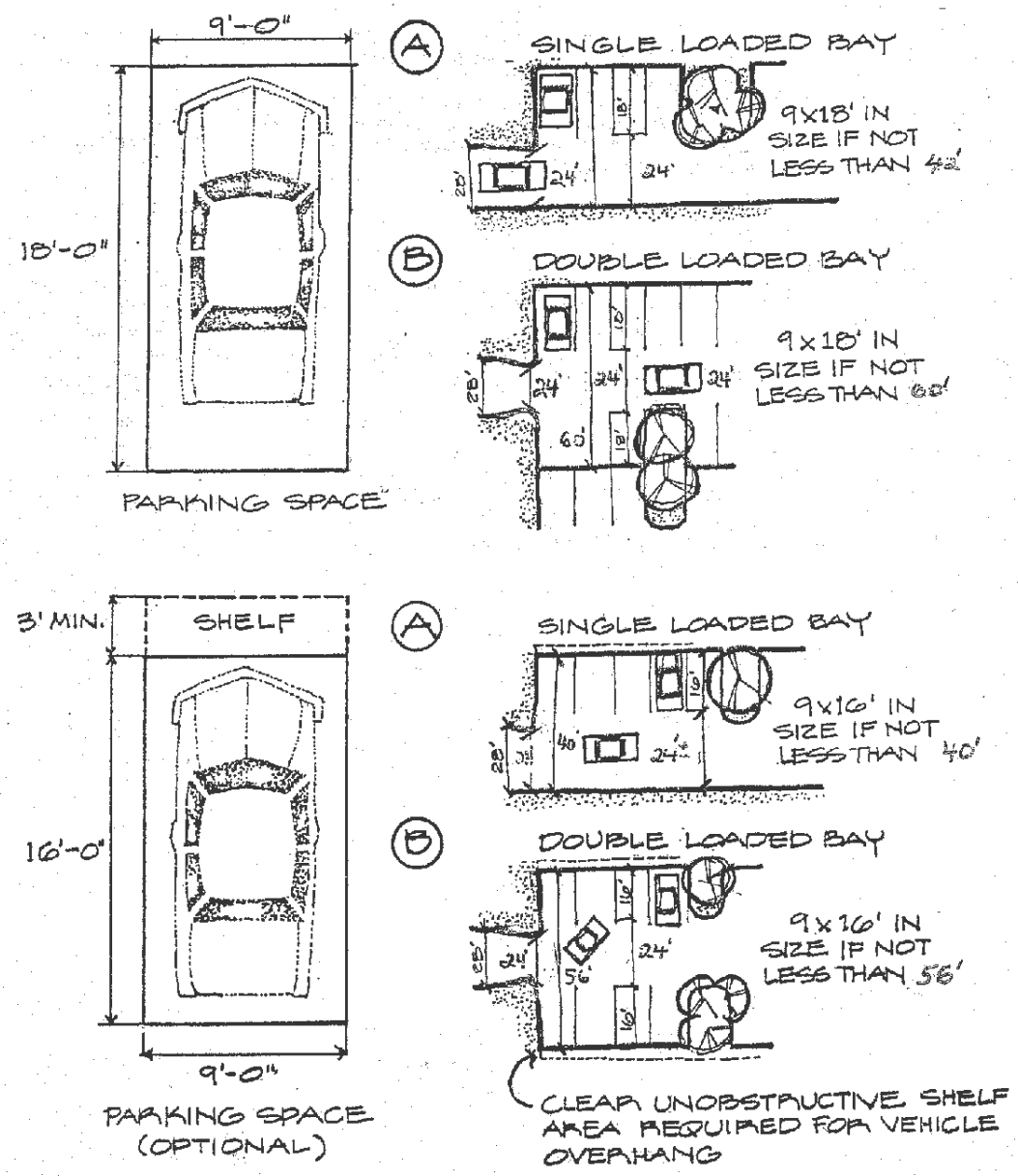

FIGURE 3

TYPICAL PARKING LOT LAYOUT DESIGNS

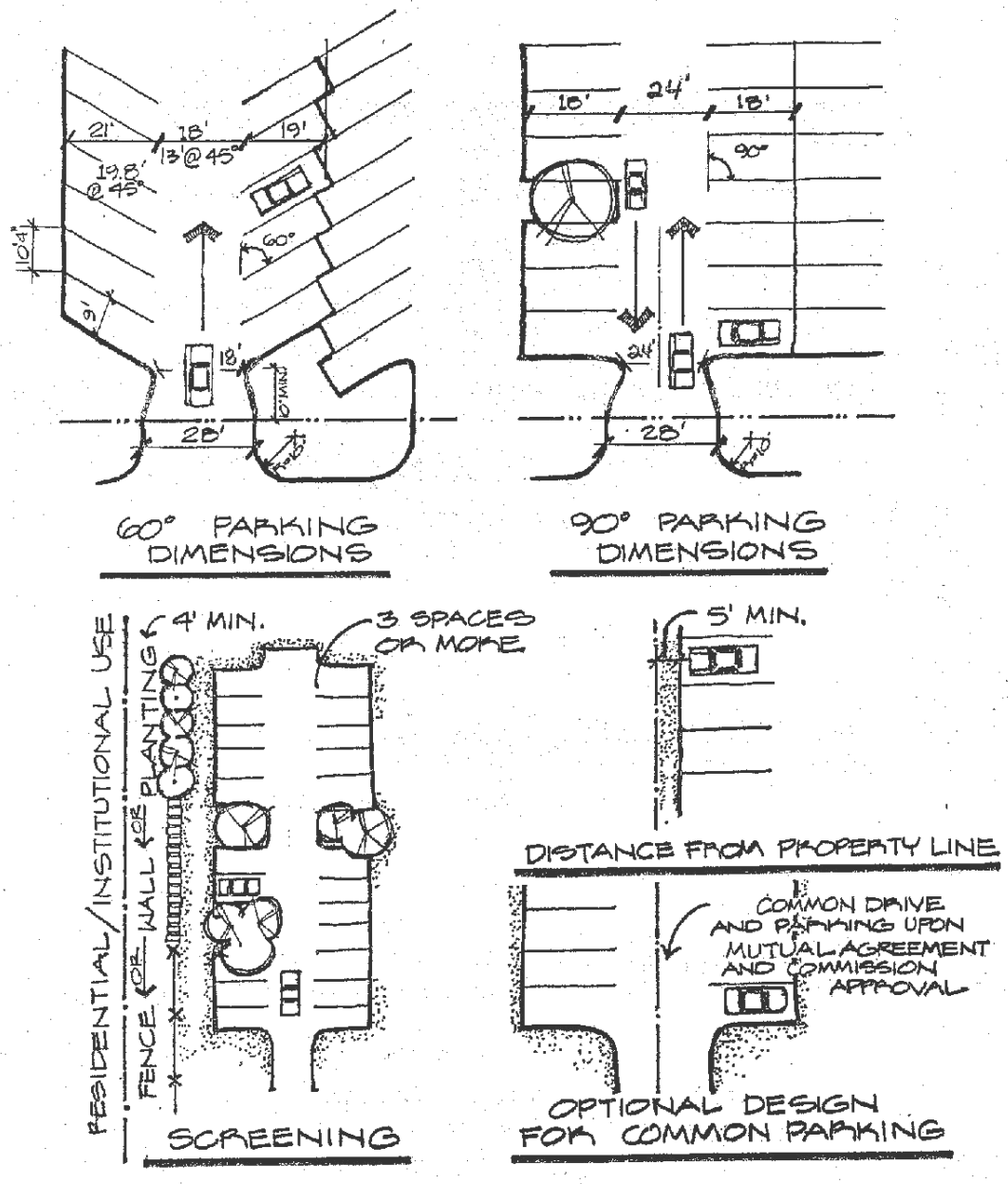

D. **Distance from Lot** -

1. On site parking spaces shall be located within 400 feet walking distance to a public entrance in the building which they are intended to serve.
2. Off-site parking may be permitted on land owned or under a long term lease controlled by the owner of the principal use to which the parking is accessory when approved by the Commission. Off-site parking spaces shall be within a radius of 600 feet walking distance to a public entrance in the building which they are intended to serve.
3. Employee parking shall be shown on the site development plan and shall be located at the rear or sides of commercial buildings or remote parts of the site or as permitted in paragraph 2 above where it will not usurp public spaces.

E. **Joint Use** - Joint use of off-street parking facilities may be permitted provided that the area of such facilities shall not be less than the sum of the requirements of the various users computed in accordance with the schedule in this section. Shared use of the same off-street parking facilities may be permitted by the Commission by uses which have different, non-competing times of operation. The Commission may permit a reduction of up to 25% of the required parking spaces due to shared use of parking facilities when the parking needs of the joint users occur at different hours of the day. Such joint or shared use of facilities must be guaranteed to the Commission by reason of agreements or conditions to which the Commission is a party, so that such joint use may not be terminated without the consent of the Commission.

F. **Screening** - More than 3 spaces shall be screened by a wall, fence, or compact planting when abutting the side or rear lot line of residential or institutional premises. Such screening shall be at least 4 feet high.

G. **Lighting** - All parking areas having more than 10 spaces shall be adequately lighted and all lighting fixtures shall be so arranged as to direct light away from residential lots. In general, lighting shall be designed to direct light upon the parking area and not upward or onto adjoining property.

H. **Distance from Property Line** - Except as limited by specific design standards contained in these regulations parking and drives shall not be closer than 5 feet from the property line, except that common drives and connecting parking may be permitted upon the written agreement between the subject parties, and approved by the Commission, and filed in the land records of the Town.

I. **Suspension -** At any time that a parking area shall cease to be available for the purposes of off-street parking, the occupancy or use permit for the main use served by such area shall be ~~revoked~~ suspended until such time as the required off-street space is provided, unless the Commission, after hearing, modifies or waives parking space requirements.

J. **Modification** - These regulations may be modified by the Commission where circumstances relating to the peculiar and exceptional nature of the uses are such that the specific requirements of the parking regulations do not apply or where the Commission finds that an alternative standard or arrangement will be satisfactory.

K. **Surface Materials** – Parking areas required under Section 6.1.1.C shall be surfaced with one or more of the following materials as approved by the Commission and in accordance with specifications established by the Town of Newington:

1. Bituminous concrete.
2. Pervious bituminous concrete.
3. Pervious concrete.
4. Pervious pavers.
5. Other pervious surface approved by the Commission on recommendation of the Town Engineer.

L. **Deferral of Immediate Installation** – The Commission may defer the immediate installation of up to 25% of the required parking spaces where sufficient evidence has been presented, in the judgment of the Commission, to show that the reduced parking facilities will adequately serve the proposed use. Before approval of a waiver by the Commission, the applicant shall show upon the Site Development Plan the complete layout for the full parking requirements. The owner shall file that plan in the Office of the Town Clerk, stipulating that the owner, or the successor and assigns of the owner, will install as many of the waived parking spaces as the Commission deems necessary within 6 months of the Commission's request, when, in the opinion of the Commission, such installation is needed.

DRAFT

6.1.2 Off-Street Loading Regulations

In connection with every building or part thereof hereafter erected, having a gross floor area of 5,000 square feet or more, which is to be occupied by manufacturing, storage, warehouse, goods, display, retail stores, wholesale stores, markets, hotels, laundries, dry cleaners or other uses similarly requiring the receipt or distribution by vehicles of material or merchandise, there shall be provided and maintained on the same lot with such building at least one off-street loading space plus one additional such loading space for each 20,000 square feet or major fraction thereof of gross floor area so used in excess of 10,000 square feet.

A. Each loading space shall be not less than 10 feet in width, 25 feet in length, and 14 feet in height.

B. No such space shall be located closer than 50 feet to any lot in any residential zone unless wholly within a completely enclosed building.

C. Loading docks and overhead doors shall not be located on the front side of the building facing the public street. (Effective 12-01-01)

D. Such loading space(s) shall be constructed and maintained in accordance with Section 6.1.1.K of these Regulations.

6.1.3 Landscape Requirements

A. Not less than 10% of the interior of a parking lot containing five or more parking spaces shall be landscaped with trees and continuously maintained. For large retail developments in excess of 40,000 sq. ft. of gross floor space not less than 15% of the interior of the parking area shall be landscaped.

B. Planting along the perimeter of a parking area, whether for screening, landscaping ~~or~~ buffering, or stormwater management (including low impact development techniques), will not be considered part of the 10% interior landscaping.

C. Where a parking area abuts the buildings on the subject property, the adjacent border plantings are not considered part of the interior landscaping.

D. Planting beds shall have an area of not less than 25 square feet, excluding curbing.

E. Planting beds must be distributed as evenly as possible throughout the parking area.

DRAFT

F. The parking lot landscaping plan shall show a satisfactory method of storm drainage and planting beds shall be protected by curbing. Such planting beds may, with approval of the Commission, be used for stormwater management (including low impact development techniques) and the requirement for curbing may be modified or eliminated in such situations.

G. The parking lot landscaping plan shall be drawn to scale, and shall show the plant list giving common names, caliper, height, eventual spread, the quantity of each and, when appropriate, the spacing. Unless modified by the Commission in order to enhance stormwater management (including low impact development techniques) at a specific location, ~~When~~ planted shrubs shall not be less than 18" to 24" in height and trees 2 ½" caliper at breast height. (Effective 12-01-01)

H. Ground cover alone is not acceptable. Trees selected will be checked for suitability in regard to eventual spread and adaptability to ~~existing~~ drainage, soil and climate conditions.

I. Preparation of beds for trees shall be specified. Mulched planting beds shall be provided around all trees and shrubs.

J. Gravel or stone shall not be used for ground cover unless approved by the Commission for stormwater management purposes (including low impact development techniques) and only when suitably contained within the intended area.

K. Trees and bushes planted within 5 feet of any parking area shall be of a variety capable of withstanding salt damage.

L. Whenever ~~When~~ possible, existing trees shall be saved by appropriate welling or mounding.

M. In order ~~-~~to promote the use of low impact development techniques~~not to alter excessively the ground water table~~, the applicant is encouraged to integrate water infiltration areas and water retention areas within the overall design of the parking lot.

N. The Commission reserves the right to determine the need for, and may require the installation of, irrigation systems to ensure the vitality of landscaped areas of the site. (Effective 12-01-01) Irrigation systems using rain barrels and cisterns may be required by the Commission to the extent practicable.

DRAFT

NEWINGTON – Low Impact Development Strategies

Recommended Zoning Regulation Changes

Zoning Regulations

4

Landscaping Regulations

The following modifications are recommended to Section 6.10 of the Zoning Regulations (Landscaping Regulations) in order to coordinate low impact development strategies with landscaping requirements. Deletions are shown as red "strike through" text (e.g. ~~deletion~~) and insertions are shown as red underlined text (e.g. insertion).

SECTION 6 - SPECIAL REGULATIONS

Section 6.10 Green Space, Landscaping and Buffer Requirements

6.10.1 **Minimum Landscaped Area -** Notwithstanding other portions of this regulation, no use shall be permitted in any zone which does not leave a minimum 10 percent of the total lot area free of any building, impervious surface material or other structures, not including required yards. Such minimum area shall be planted with grass, moss, ground cover or trees in such a way as to allow natural percolation of rainwater and not to interfere with adequate drainage of rainwater from surfaced or built-up portions, and to promote proper environmental design, including the implementation of low impact development techniques.

6.10.2 **Location -** Generally, the green space will be located in the yard areas and most particularly, in the front yard.

6.10.3 **Town Center -** In the B-TC Zone, the green space may include the landscaped space required in the parking regulation.

6.10.4 **Berlin Turnpike -** On the Berlin Turnpike, the front yard green space and landscape area is most important to the public interest for the preservation and enhancement of property values, the implementation of vegetative low impact development techniques, and the control of traffic function and reduction of hazards.

A. Alteration and additions affecting 25 percent of the gross floor area or more for business and industrial uses shall make substantial effort to add green space and landscaping, particularly in the front yard.

B. New construction of business and industrial uses shall provide front yard green space and landscaping of at least 35 feet. The Commission may waive this requirement in whole or in part in accordance with the procedures of Section 6.10.5 (C). When requested to waive this standard the Commission will take into account access management measures and parking lot green space enhancements proposed by the applicant and the implementation of vegetative low impact development techniques.

6.10.5 **Buffers**

Where buffers are required in this regulation, the following standards shall be met.

A. If, in the judgment of the Commission, a buffer is necessary to protect residential areas within or adjacent to the proposed area, the Commission may require landscaping, fencing or other appropriate screening within any required front, side or rear yard, in an amount and location appropriate to the need for such screening.

B. A minimum buffer area shall be not less than 25 feet in width and planted with evergreens no fewer than 2 rows nor further than 15 feet apart, with trees planted no more than 15 feet apart along each row, staggered to provide maximum screening, and using trees not less than 5 feet in height at time of planting. Suitable existing tree cover may be substituted. When the proposed new development abuts existing Town-owned open space or a designated greenway, the minimum buffer area shall not be less than 50 feet in width. Suitable existing tree cover may be substituted when approved by the Commission. (Effective 3-4-2011) Where authorized by the Commission, the buffer area may be used for stormwater management and implementation of vegetative low impact development techniques.

C. The Commission reserves the right to alter the buffer requirement when, in its opinion, the individual natural, topographical, or manmade utilities of the site clearly indicate that the buffer requirement is inappropriate. The buffer may not be increased to more than double nor decreased to less than half the requirement herein, and any such action shall require a two-thirds vote of the Commission members present.

DRAFT

NEWINGTON – Low Impact Development Strategies

Recommended Zoning Regulation Changes

Zoning Regulations

5

Content of a Site Plan

The following modifications are recommended to Section 5.3.4 of the Zoning Regulations (Contents of a Site Plan) in order to ensure that appropriate information is submitted as part of an application to the Planning and Zoning Commission. Deletions are shown as red "strike through" text (e.g. ~~deletion~~) and insertions are shown as red underlined text (e.g. insertion).

SECTION 5 - GENERAL REGULATIONS

5.3 Procedures and Requirements for Site Plans

5.3.4 Content of a Site Plan

(note that Sections 5.3.4.A and 5.3.5.B are not in the regulations published on-line)

C. **Context ~~Key~~ Map**: An overall map drawn to a scale of 1" = 200', which can be used as an overlay on Metropolitan District Maps. This map will show the overall design of the development and surrounding property within 500 feet.

1. Data block which gives required zoning information such as height, area and yard requirements, parking, spaces, green space, etc.
2. Layout of buildings.
3. Layout of streets and parking.
4. Lines indicating proposed drainage system with direction arrows.
5. Lines indicating sanitary sewer system with direction arrows.
6. Names of abutting property owners.
7. Proposed open spaces and recreation area, if required.
8. Inland Wetland and Watercourses showing 50 foot setback area and 100 foot upland review area. (Effective 8-15-07)
9. Hydrologic soil groups based on information available from the United States Department of Agriculture Natural Resource Conservation Service and/or highly pervious soils as found from onsite soil testing.
10. Trees with six inch (6") caliper or larger.

11. Area identified on the Natural Diversity Database as maintained by the Connecticut Department of Energy and Environmental Protection.

No changes proposed to the following sections:

5.3.4.D Architectural Elevations
5.3.4.E Plot Plan

F. **Topographic and Utility Map**: A map drawn to a scale of 1" = 40', preferable on sheets not exceeding 25" by 37", including ruled margins, shall, in addition to the requirements of the Plot Plans, show the following:

1. All existing and proposed buildings.
2. Curb lines, curb cuts, edge of pavement, and pavement width.
3. Existing and proposed sanitary sewers.
4. Existing and proposed water and gas main systems.
5. Existing and proposed contours shall be shown in not less than two-foot intervals; but in cases of relatively level land, the contours shall be one-foot intervals. Existing contours in excess of fifteen (15%) percent gradient shall be identified by shading the areas that meet this criterion. (Effective 3-4-2011)
6. Proposed storm drainage system, showing all low impact development techniques (such as swales, rain gardens, infiltration trenches, etc.) and any structural measures (such as catch basins, end walls, manholes, lengths and sizes of pipes, with invert elevations of each inlet and outlet).
7. Connections of all springs into proposed storm drainage system as needed.
8. Location and indications of existing brook channels, and 100-year flood limits.

G. **Erosion Control Plan**: The disturbance of any area exceeding one-half acre shall require an Erosion and Sediment Control Plan to conform with P.A. 83-388 of the Connecticut General Assembly, and Section 8-25 of the General Statutes as amended, and the following requirements:

2. Existing and proposed boundary and lot lines, with dimensions given in feet and areas given in square feet. Existing and proposed easements and right-of-way for public utilities and other public uses with dimensions given in feet.
3. Location of all wetlands and water courses on the property and within sufficient distance beyond the property line and the extent of proposed changes in their configurations.
4. Location of proposed activities.

DRAFT

5. Elevation at two-foot contour intervals. If deposition, removal or grading of material is proposed, resulting elevations shall be shown by two-foot contour intervals.
6. Identification of wetland soils, including locations of any soil borings or test holes. Soil types shall be identified in accordance with categories established by the National Cooperative Soil Survey of the United States Department of Agriculture, Soil Conservation Service.
7. A general delineation of the vegetative cover of any regulated area.
8. Bodies of water and high water level for all inundated areas.
9. All drainage appurtenances existing and proposed together with erosion control measures or temporary or permanent soil erosion control measures to be constructed in connection with, or as part of, the proposed work.
10. Details of erosion control measures.
11. Proposed limits of disturbance / compaction and the method of ensuring same.

No changes proposed to the following section:

5.3.4.H Access Management Plan

DRAFT

NEWINGTON – Low Impact Development Strategies

Recommended Zoning Regulation Changes

Zoning Regulations

6

Site Plan Review Standards

Section 7.4 of the Zoning Regulations contains a number of technical standards governing site plan applications. However, these standards ***would not*** be applicable to an activity which only requires a zoning permit. Therefore, it is recommended that Section 7.4 be amended to refer to other Sections of the Zoning Regulations for technical standards related to drainage. Deletions are shown as red "strike through" text (e.g. ~~deletion~~) and insertions are shown as red underlined text (e.g. insertion).

SECTION 7 - ADMINISTRATION

Section 7.4 Design Standards, Site Plan Check List

The Commission shall use the following standards of the review of plans submitted to the Commission for review and action pursuant to Section 5.3 of these Regulations. The construction of any improvements shown on any such plan shall be in accordance with these standards.

7.4.1 Design Manual And Construction Standards

A. The Low Impact Development and Stormwater Manual for the Town of Newington shall be used as a design manual for stormwater management.

B. The following documents shall be used for construction standards:
1. The current ConnDOT, publication, as amended, "Standard Specifications for Road, Bridges and Incidental Construction,"
2. Town of Newington, "Specifications for Construction of Roads,"
3. Town of Newington Zoning Regulations,
4. Town of Newington Subdivision Regulations, and
5. Connecticut Landscape Contractors Association's "Standard Specifications for Planting Trees, Shrubs, Vines, etc.".

No changes proposed to the following sections:

7.4.2 Map Scales and Sheet Size
7.4.3 Property Lines
7.4.4 Street Lines
7.4.5 Rights-of-Way, Easements or Stream Encroachment Lines

7.4.6 Driveway and Parking

A. For any development requiring site plan approval, all~~All~~ new driveways and parking areas shall be constructed ~~of bituminous concrete pavement~~in accordance with Section 6.1.1.K. Driveways shall conform to Town of Newington Specifications for Private Streets and Parking Lots. See typical cross-sections in Section 6.

B. Each parking space shall be shown. See typical details in Section 6.

C. Unless otherwise approved by the Commission (such as for implementing low impact development techniques or other reasons), driveways ~~Driveways~~ shall be at least 28' in width from the face of curb, but unusual, adverse field conditions may be recognized by the Commission and the minimum width may be reduced to 24'.

D. Maximum permitted grade for a driveway is 10%. Maximum grade for a parking area is 5%. Cross pitch on any driveway shall not exceed 5%.

E. No parking will be allowed within a street right-of-way unless specifically authorized by the Town in order to provide additional public parking within the B-TC district.

F. Horizontal and vertical control for driveways shall conform to Residential Street requirements. Where driveways intersect with streets or other driveways, the radius of the gutter shall be a minimum of 25'.

7.4.7 Elevations, Grades, Existing and Proposed

A. All elevations are to be on North American Vertical Datum, NAVD 88.

B. Contour lines are required on all plans or maps. Both the existing ground and the proposed finish grading must be shown and clearly labeled as to each type. Contour lines shall be shown at an interval of 2 feet, except where area is almost level (less than 1%). On level areas, "spot" elevations

DRAFT

may be used. Contour lines must extend at least 50 feet into adjacent properties to depict actual conditions. Existing contours in excess of fifteen (15%) percent gradient and rock outcroppings shall be identified by shading the area that meets this criterion. (Effective 3-4-2011)

C. Unless modified by the Commission in order to implement low impact development techniques, minimum ~~Minimum~~ continuous slope across grass shall be 1%; minimum slope across pavement shall be 0.6%; and maximum slope across parking lot shall be 5%.

D. Show existing and proposed ground elevations for finishing grading at all corners of buildings and structures except for individual residences.

No changes proposed to the following sections:

7.4.8 Walls and Slopes

7.4.9 Sidewalks and Curbs

A. **Public Streets -**

1. All sidewalks and curbs in public streets shall be constructed to the standards of the Town of Newington.

~~1.~~2. All sidewalks shall be made of concrete or pervious concrete or pervious pavers or other materials acceptable to the Town, at least 4 feet wide, and designed in accordance with the Town's construction standards and the American with Disabilities Act.

3. The requirement for curbing on a public street may be modified or waived by the Commission in order to implement low impact development techniques.

4. ~~Curbing shall be concrete or granite for entrance and exit drives and islands in commercial developments. Perimeter parking lot curbing for long straight runs of more than 360 feet maybe 6" bituminous curbing upon the approval of the Commission.~~

DRAFT

B. **Private Property** –

1. Curbing in commercial developments shall be concrete or granite for entrance and exit drives and parking islands.
2. A 6" continuous bituminous curb~~ing~~ is required on the perimeter of all private parking lots~~ as determined by the Town Engineer~~.
3. For a development approved by the Commission as a site plan or special permit, the requirement for curbing in a private parking area may be modified or waived by the Commission in order to implement low impact development techniques.
4. For other development not requiring approval by the Commission, the requirement for curbing in a private parking area may be modified or waived by the Town Engineer in order to implement low impact development techniques.
5. Curbing is not required for parking space adjacent to driveway for individual residences.

No changes proposed to the following sections:

7.4.10 Street Lines and Grades
7.4.11 Water
7.4.12 Sewer

7.4.13 Storm Drainage

All work shall be done in accordance with *Town of Newington Low Impact Development and Stormwater Manual* specifications. Hydraulic calculation must be submitted to the Town Engineer at the time of application for site plan development.

~~A. Standard State of Connecticut catch basin with sump required.~~

~~B. 12" minimum pipe size required for catch basins within the site.~~

~~C. 0.5% minimum acceptable grade for pipe.~~

~~D. 2.0' minimum cover over pipe except in street where 2.5' of cover is required.~~

~~E. On state highways and Town of Newington streets, the minimum size shall be 15" R.C. pipe.~~

~~F. Design storm system to handle the surface run-off from a storm having a 10-year frequency. Use 5 minute time of concentration for small parking lots. Large parking lots may require other standards, as determined by the Town Engineer. The computation shall consider all drainage areas contributing to the site, whether within the site or outside of it, based on upstream development from existing zoning or Town's Plan of Development for most intensive use.~~

~~G. Show all roof drains -- type, size, location and point of connection to storm sewer. Specify invert elevation at point of connection. This requirement applies to all building structures except single-family housing. Roof leaders shall be piped (underground) into the on-site drainage system.~~

~~H. Where the proposed storm system is to be connected to an existing State of Connecticut drainage system, computations shall meet State design standards.~~

~~I. Drainage agreement must be signed where private connection is made into Town of Newington system.~~

No changes proposed to the following sections:

7.4.14 Utilities
7.4.15 Cultural Features including Flood Plains, Inland Wetlands and Slopes.

DRAFT

7.4.16 Headwalls and Channel Protection

A. Where the storm drainage ~~sewers empty~~system discharges into any natural drainage course (brook, river, etc.), headwalls at the end of ~~the~~ any pipe are required together with adequate armoring ~~rip-rapping~~ of channel banks to provide protection from water erosion; in general, equivalent to ~~provide~~ 50 S.F. of rip-rap for a 15" pipe and increase this amount proportionately for larger sizes of pipe.

B. Designs for headwall or end walls shall be submitted to the Town Engineer for approval. Where water velocities are high (more than 3 F.P.S., aprons with energy dissipating devices may be required together with adequate armor ~~rip-rap~~.

No changes proposed to the following sections:

7.4.17 Snow Removal
7.4.18 Building or Structure Elevations
7.4.19 Fencing
7.4.20 Building Locations
7.4.21 Erosion and Sedimentation Control
7.4.22 Certification
7.4.23 Map Title
7.4.24 (Actual field conditions)

7.4.25 Additional requirements may be stipulated by the Commission for sidewalks, curbing, retaining walls, pavement construction, stormwater management, etc. on those site plans on which it has conditional approval, if it finds that unusual or special conditions of the property warrant such changes.

7.4.26 These requirements may be modified or reduced by the Commission if it finds that unusual or special conditions, including increasing the utilization of low impact development techniques, warrant a waiver from the strict interpretation of these standards.

No changes proposed to the following sections:

7.4.27 Completion Period
7.4.28 Signature Block
7.4.29 Filing of Approved Plans

DRAFT

CENTRAL CONNECTICUT REGIONAL PLANNING AGENCY

Serving Berlin, Bristol, Burlington, New Britain, Plainville, Plymouth, and Southington

225 North Main Street, Suite 304
Bristol, CT 06010-4993

Internet: http://ccrpa.org
Fax/TDD: (860) 589-6950

Tel: (860) 589-7820
or (860) 224-9888

TO:	REGIONAL PLAN COMMITTEE
FROM:	Timothy Malone, Senior Planner
DATE:	January 30, 2014
RECEIVED BY CCRPA ON:	January 29, 2014
REFERRAL NAME:	Southington Zoning Regulation Amendments
INITIATOR:	Town of Southington Planning and Zoning Commission
MUNICIPAL HEARING:	March 4, 2014
REFERRED TO:	CCRPA
DESCRIPTION:	The Town of Southington is proposing changes to zoning regulations regarding garages. The changes standardize requirements for garages across all zones. The changes also add a provision that garages in excess of three spaces require a Special Permit.
COMMENTS:	No comments were received.
STAFF RECOMMENDATION:	CCRPA recommends that the referral in this proposal be found ***not in Conflict*** with the Regional Plan of Conservation and Development or any other agency plan

PLANNING AND ZONING DEPARTMENT

Municipal Center - 196 North Main Street
Southington, CT 06489
(860) 276-6248

Certified Mail: via email

January 28, 2014

Carl J. Stephani
Exec. Director, CCRPA
225 No Main St, Ste 304
Bristol, CT 06010

RE: Proposed Zoning Regulation Amendment – Revision to Sections 2-01 A.1 and 2-07 G (ZA #577)

Dear Sir or Madam:

In accordance with the provisions of the Connecticut General Statutes, attached is a copy of a proposed zoning text revision proposing to amend Sections 2-01A1 and 2-07 G of the Town of Southington Zoning Regulations.

The Planning and Zoning Commission anticipates opening the public hearing on this item on March 4, 2014. The complete file is available for review in the Planning Department, the Town Clerk's office and on the web page. If you have any questions regarding this proposal, please feel free to contact me at (860) 276-6248.

Respectfully,

Robert A. Phillips, AICP
Director of Planning and Community Development

enclosures

PLANNING AND ZONING DEPARTMENT

MUNICIPAL CENTER, 196 NORTH MAIN STREET
SOUTHINGTON, CONNECTICUT 06489
PHONE (860) 276-6248 – FAX (860) 628-3511

FEE: See fee schedule

Date: 1/28/14 Z.A. # 577

PETITION TO ENACT A ZONING REGULATION AMENDMENT OF TEXT

The undersigned respectfully petitions the Southington Planning and Zoning Commission to consider granting a change in the text of the Zoning Regulations.

Description of proposed amendment with all related subsection numbers. Show existing text in upper and lower case and show proposed additions in all upper case letters or underlined numbers. Proposed deletions should be enclosed within double parentheses.

See attached

Is any zoning district potentially impacted by this proposed amendment within 500 feet of a Town boundary?

✓ yes _____ no

Reason for desired amendment: TO STANDARDIZE ADDITIONAL GARAGE SPACE ACCROSS ZONING DISTRICTS IN TOWN AND ALLOW DUE PROCESS BY SPECIAL PERMIT FOR THOSE IN EXCESS OF THREE SPACES.

Applicant:

Southington Planning + Zoning Comm.
Name

196 North Main St
mailing address

Southington CT 06489

860-276-6248 860-628-3511
phone # fax #

PhillipsR@southington.org
email

applicant signature:

Agent:

Name

mailing address

phone # fax #

email

P:\P & Z forms\zone regulation amendment application form.doc

PROPOSED NEW TEXT = BOLD, ITALICS
PROPOSED DELETIONS = [BRACKETS,UNDERLINED]

SECTION TWO

DEFINITIONS

For the purpose of these Regulations, certain words and terms shall have the meanings as listed below. Questions as to the precise meaning of other words and terms shall be determined by the Planning and Zoning Commission with reference to the Connecticut General Statutes. Words in the present tense include the future and words in the singular include the plural and vice versa. The word "shall" is always mandatory and "person" includes a partnership, firm, association, or corporation.

2-01 A

ACCESSORY USE OR BUILDING - A use or building customarily incidental and subordinate to the principal use or building which is located on the same lot as such principal use or building, or on a contiguous lot under the same ownership subject to the following conditions:

A. In Residential Zones, the following uses shall be considered accessory uses:[1]

1. Private garages ***greater than 3 spaces (as defined below) shall require a Special Permit Use and in addition all garages***, sheds and other accessory structures shall be located a minimum of 10 ft. from any property line when located in the rear yard otherwise complying with the appropriate front or side yard requirement. [Except in R-80 Residential Zones, private garages shall not contain more than three parking spaces. In R-80 Residential zones, private garages shall not contain more than five parking spaces, where at least two parking spaces are detached from the dwelling unit and at least two parking spaces are attached to the dwelling unit.] ***A garage space shall be defined as a 14 foot x 26 foot dimensional footprint for purposes of calculation on number of spaces.*** Other than garages used to house motorized vehicles or barns used to shelter animals, accessory buildings shall follow the area schedule below. No more than one (1) accessory shed shall be erected on a lot. Maximum accessory shed or building size per zoning district shall be as follows:

- R-80 = 350 square feet
- R-40 = 300 square feet
- R-20/25 = 260 square feet
- R-12, RO and RHD = 200 square feet[2]

2-07 G

GARAGE, PRIVATE - A detached accessory building or a portion of a main building for the parking of automobiles belonging to the occupants of the premises and in which no occupation or business for profit is carried on. A private garage shall not exceed a height of one and one half story and shall be constructed with the same exterior building material as that of the principal structure. ***Also see Accessory Use or Building in Section 2 – Definitions.***

---

[1] revised, ZA #544, effective 3/22/08
[2] revised, ZA #558, effective 12/25/10
[3] revised, ZA #___, effective _____