Middle Street Dam Removal Engineering Report

Pequabuck River

Bristol, Connecticut

Prepared for:

Central Connecticut Regional Planning Agency
c/o Francis R. Pickering
Senior Planner
225 North Main Street, Suite 304
Bristol, CT 06010
Email: dam@ccrpa.org

Prepared by:

Princeton Hydro Engineering, PC

New England Regional Office
931 Main Street, Suite 2
South Glastonbury, CT 06073
(P) 860.652.8911
(F) 860.652.8922
www.princetonhydro.com
Laura A.S. Wildman, P.E.
lwildman@princetonhydro.com

_____

Laura Wildman, P.E.
CT License No. 0018596

March 2013

Funding provided by
Farmington River Enhancement Grants
administered by the
Connecticut Department of
Environmental Protection (DEP)

Table of Contents

1. Introduction 1
   Site Description 1
2. Field Investigation 3
3. Sediment Quantity, Quality & Management Plan 5
4. Geotechnical – Infrastructure Stability 8
   Field Investigation 8
   Encountered Conditions 8
   Existing Retaining Wall 9
   Construction Recommendations 12
5. Fish Passage 12
6. Hydrology & Hydraulics Analysis 14
Hydrology 14
   Methodology 14
   Results 14
Hydraulics 15
   Methodology 15
   Results 16
   Design Recommendations 17
7. Permitting 18

Appendix A	Geotechnical Calculations and Supplemental Geotechnical Memorandum
Appendix B	Fish Passage Requirements
Appendix C	Hydrology Data
Appendix D	Hydraulic Modeling Data
Appendix E	Riprap Sizing Calculations
Appendix F	Pipe Flow Calculations
Externally Attached	Engineering Design Plans

1. Introduction

The Central Connecticut Regional Planning Agency (CCRPA), with a grant administered by CT DEEP, has contracted with Princeton Hydro Engineering, PC, to design and permit the removal of the Middle Street Dam. Middle Street Dam is owned by the Connecticut Department of Transportation (ConnDOT) and is registered with the Connecticut Department of Energy and Environmental Protection (CT DEEP). The dam is inspected every two years by the ConnDOT Hydraulics and Drainage Section and maintenance is performed as necessary by ConnDOT maintenance staff.

The project goals outlined by the project partners are:

- Movement of Atlantic salmon, American shad, river herring, sea lamprey and other species into the Pequabuck River
- Restoration of uninterrupted habitat
- Reintroduction of streamside vegetative buffers
- Future establishment of environmentally sensitive river access
- Addressing the presence of pollutants within the impounded sediment

The primary project goal is to restore fish passage on the Pequabuck River in Bristol, Connecticut. Target fish species, as determined by the CT DEEP Inland Fisheries Division through an understanding of historic fish runs within the Farmington River watershed, include diadromous fish species such as Atlantic salmon, American shad, river herring (both alewife and blueback herring), sea lamprey, American eel, white perch, as well as riverine species such as trout and white sucker.

Site Description

The Middle Street Dam, also known as the Bristol Brass Dam according to the CT DEEP Dam Safety's inventory of dams, is a seven (7) foot high concrete ogee spillway that extends 95 feet, from bank to bank, across the Pequabuck River just upstream of the Middle Street Bridge in Bristol, Connecticut. Due to the modern construction of this dam it is highly likely that the dam is reinforced, however no internal investigation of the dam was made to verify this. For this removal, it is conservatively assumed that the dam is reinforced. The current concrete dam was preceded by an older granite block, stair-stepped dam. The early dam or a portion of it may still remain below the current concrete dam, however the mechanical test pits conducted for this study determined that the previous dam does not exist beneath the impounded sediments just above the current dam location. The dam is entirely founded on bedrock and once supplied water to the Bristol Brass factory located downstream of the dam and on the northern side of the railroad line that parallels the river in this location. Currently the dam's impoundment is entirely filled with coarse grained sediment, and water depths typically only reach 1 to 2 feet within the impoundment under mean flows.

The Middle Street Dam (aka the Bristol Brass Dam) on the
Pequabuck River in Bristol, CT

The 1968 Middle Street Bridge plans show that a concrete apron was added just below the current concrete dam, when the Middle Street Bridge was rebuilt, and our field investigation verified the presence of the concrete apron. The concrete apron appears to extend 235 feet from the base of the dam, under the Middle Street Bridge and downstream of the bridge. The plans refer to a fish channel that may have been built into the concrete apron to provide a more concentrated low flow path. The concrete apron is not visible from the riverbank, primarily because the streambed aggradation has covered the majority of the apron with coarse grained sediment, most notably beneath the Middle Street Bridge and in the reach below the bridge.

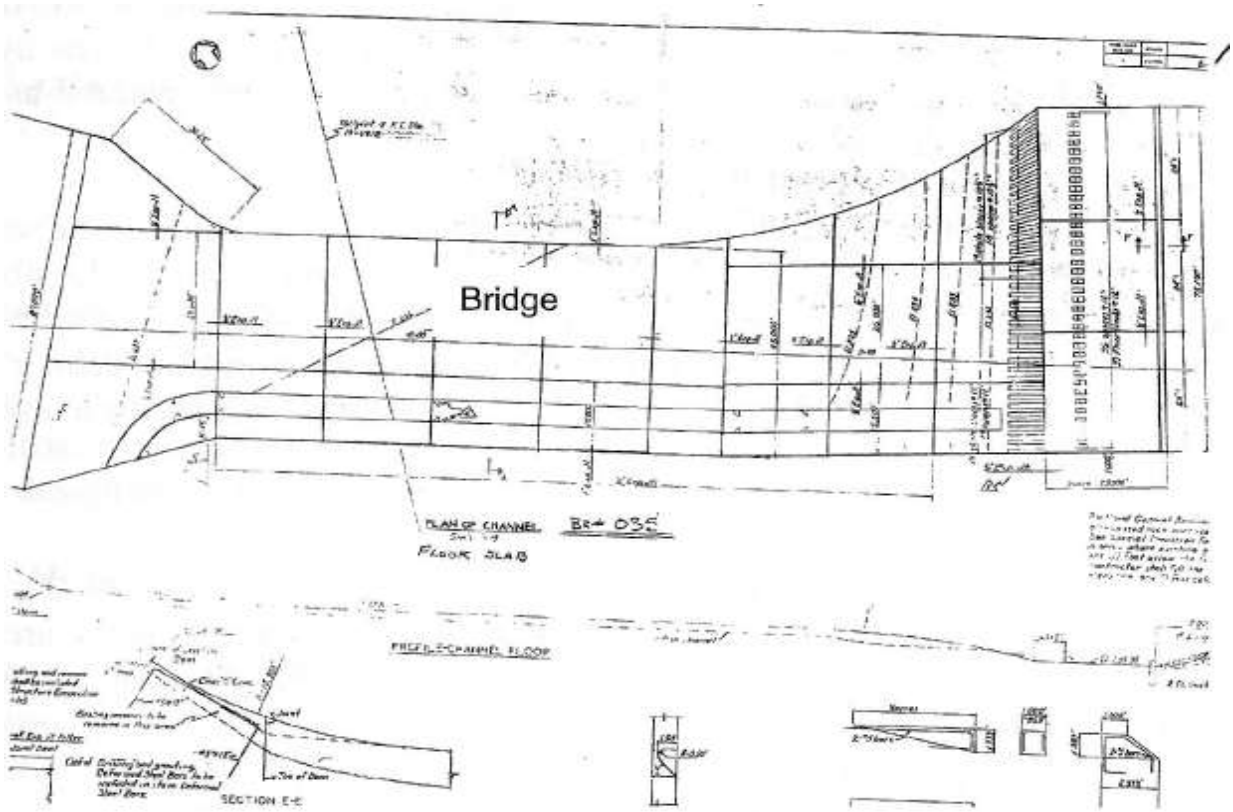

1968 Middle Street Bridge plans – concrete apron detail

2. Field Investigation

GM2 conducted a field topographic and bathymetric survey in January 2010. Princeton Hydro staff conducted a field investigation, geomorphic assessment and geotechnical investigation including subsurface test pits within the impoundment on 29 April 2010.

Princeton Hydro has characterized and quantified the extent of impounded sediment behind the Middle Street Dam, and determined the depth to original channel bed, which for the most part is underlying bedrock. The Middle Street Dam is currently filled to capacity with impounded sediment. Only a shallow, one- to two-foot, pool of water exists above the dam. The majority of impounded sediment is coarse material – a framework of large cobbles with sand and gravel infill, making hand probes impossible within this impoundment. Princeton Hydro investigated the impounded sediment depths by excavating multiple test pits along the impoundment length with a small mechanical excavator, as per our consultation with CT DEEP Water Planning and Standards and Inland Water Resources.

No additional infrastructure, other than the previously identified Route 72 retaining wall, was identified that had the potential to be impacted by dam removal.

The Middle Street Dam is founded on a bedrock outcrop at the base of a steep, bedrock dominated reach of the Pequabuck River where it passes between Castle Rock and Hurley Hill, breaking through a ridgeline composed of coarse-grained schist ("The Straits Schist" formation). It is highly likely that the Middle Street Dam's impoundment submerged a bedrock cascade in this area at the contact zone between The Straits Schist and New Haven Arkose formations. The dam itself was likely built on a small bedrock drop, approximately 1 to 2 feet in height. Due to the narrow valley and steep slope, this reach is prone to transporting sediment supplied from upstream reaches. Just downstream of the dam, the channel slope is reduced as it enters the low-lying arkose formation. Historically, these downstream reaches had a broader floodplain that allowed sediment deposition, which current development has since precluded. A coarse cobble depositional bar is evident just downstream of Middle Street Bridge; the over-widened channel in this reach has greatly added to the potential for sediment deposition below the dam.

As part of Princeton Hydro's geomorphic assessment of the Pequabuck River in the vicinity of the dam, a visual assessment of the streambed substrate was conducted as well as a pebble count of the impoundment material directly upstream of the dam.

The reach between the Memorial Boulevard Bridge and the Downs Street Bridge is dominated by bedrock. Bedrock is visible within the riverbed and extending below both bridges. The bedrock extends across the entire riverbed at the Memorial Boulevard Bridge and along the right bank of the river at the Downs Street Bridge crossing. A 100-foot cobble and boulder cascade, with a D_{50} of 12" based on visual observations, was located approximately 300 feet downstream of the Downs Street Bridge crossing.

The reach below the former gas line crossing is dominated with boulders and multiple exposed bedrock outcrops along the channel bed. Repeated bedrock outcrops, in the context of the narrow valley walls and adjacent ridgeline are clear indicators that bedrock is the controlling factor in the river profile and alignment through the impoundment and dam. There is a boulder riffle approximately 65 feet downstream from the former gas line crossing. Impounded sediment associated with the Middle Street Dam is not present in this reach.

The impounded reach above the Middle Street Dam and adjacent to the old Route 72 retaining wall, looking downstream (photo on left) and looking upstream from the Middle Street Bridge, showing the Middle Street Dam in the forefront (photo on right)

The impounded reach created by Middle Street Dam is approximately 300 feet in length. Some bedrock outcrops are still visible within the streambed in this reach although the surface substrate typically ranges from 2" to 1.5' in diameter with a visually determined average particle size of approximately 4" to 5". The depth of substrate in this impoundment was estimated utilizing the results from the mechanical test pits that were excavated throughout the impoundment down to bedrock. All of the test pits encountered shallow bedrock beneath the impounded sediment, ranging from bedrock right at the surface to bedrock at depths of 5' to 6' below the surface of the impounded sediment just upstream of the dam. Shallow underlying bedrock formed the former channel bottom, served as the ideal base of construction for Middle Street Dam, and after dam removal, will again serve as the control against channel incision and ensure that the adjacent structures will not be undermined.

The Middle Street Dam and the pool downstream of the dam (photo on left) and the reach between the Middle Street Dam and the Middle Street Bridge (photo on right), both underlain by a concrete apron

Downstream of the Middle Street Bridge the channel grade flattens out and the reach becomes a significant zone of aggradation. A 255-foot long sediment bar has developed across the majority of the streambed, made up of 2" to 1' diameter material. Multiple 6" diameter trees have started to grow on top of the sediment bar. The maximum width of the sediment bar is 55'. Even if these deposits were removed as part of the dam removal process, they would quickly redeposit due to the decreased riverbed slopes and wide channel width in this reach.

Downstream of the Middle Street Bridge a makeshift berm has been constructed along the right channel bank. The stability of this berm is highly questionable. Further downstream a new bridge crossing has recently been completed to accommodate the Route 72 extension. There is visible bank erosion along the left bank of the river just downstream from the new bridge crossing.

3. Sediment Quantity, Quality & Management Plan

An earlier sediment sampling effort behind the dam completed in 1999 by Milone & MacBroom revealed that multiple polycyclic aromatic hydrocarbon (PAH) compounds exceeded the Pollutant Mobility criteria for GA, GAA, and GB areas and the Direct Exposure criteria for

residential areas as per the CT DEEP's Remediation Standards for Soils. These criteria can be used to determine proper disposal sites and as an indicator of the extent of contamination. PAH compounds are formed when organic material burns, and occur in materials such as asphalt, coal tar pitch and creosote. In addition to PAH's, Total Petroleum Hydrocarbons (TPH) also exceeded the Pollutant Mobility criteria for GA, GAA, and GB areas and were found in levels in excess of the Direct Exposure criteria for industrial areas. The contaminant levels found during the mass-based analysis for metals led DEP to request additional TCLP testing, which concluded that both Cadmium and Lead exceeded the Pollutant Mobility criteria for GA and GAA areas (Milone & MacBroom 1999). These results are not especially surprising given the industrial history of the Pequabuck River and its highly developed watershed in the area of the dam.

As per CT DEEP request, the 1999 sample results were compared to the consensus-based, freshwater sediment quality guidelines (SQGs) compiled by MacDonald and Ingersoll[1]. Multiple SQGs have been developed through a variety of approaches with varying advantages and limitations. Consensus-based SQGs have been developed to synthesize previously published SQGs and have been shown to be accurate predictors of sediment toxicity and the absence of toxicity to benthic invertebrates by direct contact. These SQGs have been established in two-tiers: the Threshold Effect Concentration (TEC) and Probable Effect Concentration (PEC). TEC is the concentration below which harmful effects are unlikely to be observed; PEC is the concentration above which harmful effects are likely to be observed. These SQGs do not consider the potential for bioaccumulation and are not intended to serve as site-specific clean-up levels.

Results are summarized in Table 2.

- Three samples exceeded the PEC for 6 semivolatile substances (Polycyclic Aromatic Hydrocarbons – PAHs)
- Most metals were not found in excess of SQGs except:
    - Copper exceeded TEC in all samples
    - Lead exceeded TEC in 2 impounded sediment samples but exceeded PEC in the downstream grab sample also
    - Nickel exceeded TEC in 2 of 3 samples
- PCBs exceeded TEC in 2 of 6 samples

[1] MacDonald, DD, and Ingersoll, CG. 2002. A Guidance Manual to Support the Assessment of Contaminated Sediments in Freshwater Ecosystems, Volume III – Interpretation of the Results of Sediment Quality Investigations.

Table 1. Sediment analysis results compared against Consensus-based Sediment Quality Guidelines[1].

Test Parameter	Sample Results						Consensus-based SQGs	
	B-1 0'-2'	B-1 2'-4'	B-2 0'-2'	B-3 0'-2'	B-3 2'-4'	down-stream grab	TEC	PEC
Semivolatile Substances (ppm)								
Anthracene	ND	ND	ND	ND	0.680	ND	0.0572	0.845
Benzo(a)anthracene	ND	1.620	1.330	ND	2.970	ND	0.108	1.050
Benzo(a)pyrene	ND	1.970	1.210	ND	3.380	ND	0.150	1.450
Flouranthene	1.480	2.260	2.160	0.700	3.220	ND	0.423	2.230
Phenanthrene	ND	2.150	1.210	ND	2.240	ND	0.204	1.170
Pyrene	1.450	2.100	1.990	ND	3.410	ND	0.195	1.520
Inorganic Substances (ppm)								
Arsenic (As)	0.73	0.68	0.53	0.40	0.47	0.53	9.79	33.0
Cadmium (Cd)	ND	ND	ND	ND	ND	ND	0.99	4.98
Chromium, Total (Cr)	11.8	19.6	24.8	35.7	25.2	6.7	43.4	111
Copper (Cu)	95.0	43.1	40.4	54.7	52.8	46.8	31.6	149
Lead (Pb)	25.1	31.0	25.9	54.4	38.2	222.5	35.8	128
Mercury (Hg)	0.026	0.015	0.015	0.034	0.017	0.010	0.18	1.06
Nickel (Ni)	9.2	13.6	14.6	22.9	25.7	5.8	22.7	48.6
Zinc (Zn)	0.0	44.3	47.7	68.3	69.9	28.5	121	459
Pesticides and PCBs (ppm)								
Chlordane	ND	ND	ND	ND	ND	ND	0.00324	0.0176
Dieldrin	ND	ND	ND	ND	ND	ND	0.00190	0.0618
Endrin	ND	ND	ND	ND	ND	ND	0.00222	0.00207
Heptachlor epoxide	ND	ND	ND	ND	ND	ND	0.00247	0.0160
Lindane (Gamma-BHC)	ND	ND	ND	ND	ND	ND	0.00237	0.00499
PCB's (Aroclor)	ND	ND	0.210	ND	0.116	ND	0.0598	0.676

It was determined that full removal of the impounded sediments would likely be required due to the petroleum product contamination. This contamination was further confirmed, while conducting the test pits, by the strong presence of a petroleum odor emanating from the impounded sediment that was excavated from directly behind the dam. Full removal of impounded sediment therefore eliminates the issues associated with sediment migration and ecological risk. The impounded sediment, once fully removed, will be disposed of off-site in a pre-approved location that accepts sediment with this particular suite of contaminants.

The sediment impounded behind the dam was quantified using the depth to bedrock that was determined through the mechanical test pits. In addition the limit of impounded sediment was also further delineated by the presence of visible bedrock on the surface of the riverbed initiating along the left bank only 110 feet above the dam and extending across the majority of the channel bed approximately 360 feet above the dam. The quantity of impounded sediment behind the Middle Street Dam has been estimated to be 2,000 cubic yards (CY).

4. Geotechnical – Infrastructure Stability

Field Investigation

To ascertain the conditions at the dam with regards to the location/presence of the historic former dam, the nature of the impounded sediments, and the influence of the Route 72 retaining structure on the removal of the dam, the stream bed up-gradient of the Middle Street Dam was intrusively investigated.

This was completed by way of test pits excavated with a CAT 308C rubber track mounted excavator, owned and operated by Moonlight Excavating. The test pits were advanced in the stream bed without de-watering, therefore an intact profile was not readily visible. Soils were observed and generally classified by the visual inspection of disturbed soil samples in the bucket of the excavator, no samples were collected as a result of the investigation. A total of 13 test pits were completed in the course of a single work day on 29 April 2010. All pits were advanced to refusal on bedrock.

Depth of the excavation was measured (when possible) with a tape measure or estimated based on the articulation of the excavation boom. The pits were concentrated along the upstream face of the dam and the downstream face of the Route 72 retaining structure.

Encountered Conditions

The sediments are (visually) classified as a well-graded/poorly sorted mixture of silt, sand, gravel, and cobbles. The silt accumulations tended to form pockets, primarily along the upstream face of the dam. These pockets of silt, when exhumed, released an oil sheen on the water and smelled heavily of hydrocarbons.

The bedrock encountered in all test pits ranged in depth from 1-8 feet. The depths varied throughout the area upstream of the dam without a persistent pattern. Generally the rock surface shallowed towards the south and east of the project area, with the deepest sediment deposits (and lowest rock inverts) along the retaining wall and concrete dam. The following

table summarizes the depths to refusal on bedrock at each test pit location. The test pit locations are presented on the plans.

Table 2. Depths to refusal of test pits.

Location	*Elevation (ft, est.)*[2]	*Bedrock*	
		Depth (ft)	Elevation (ft)
TP-1	243	5	238
TP-2	243	6	237
TP-3	243	5	238
TP-4	243	5	238
TP-5	243	5	238
TP-6	247	3.5	243.5
TP-7	244	1	243
TP-8	243.5	3	240.5
TP-9	242	8	234
TP-10	243.5	3	240.5
TP-11	243.5	2	241.5
TP-12	243.5	2	241.5
TP-13	243	1	242

As per the scope of services, analytical testing has not been completed on these sediment samples. However, the presence of hydrocarbons is readily detectible without testing; it will be necessary to dispose of the impounded sediment as hazardous waste.

The bedrock in the area consists of basement rock including micaceous schist, gneiss, and granite. The formation varies over the length of the wall; however, the general consistency of the rock is estimated to be moderately strong and fresh.

Existing Retaining Wall

The concrete retaining structure along the northern stream bank was previously constructed as part of the original siting of Route 72. The wall was investigated non-destructively for the purpose of assessing the affect (if any) the dam removal will pose to the stability of the structure.

[2] Elevations estimated from plans/basemap prepared by GM2 Associates.

The structure is a mass gravity concrete wall designed as a monolithic tapered free-standing wall section. Currently the wall retains soil and road bed on the north side and contains the flows from the river on the south side. The investigation revealed the wall is founded on bedrock, poured directly onto the uneven bedrock surface in the stream bed.

The wall has an average top width of 24 inches with a compound batter[3] on the northern face and a straight batter on the downstream face. The batter at the top of the wall (both faces) is 10° (from vertical) as measured in the field. The batter is estimated to increase to 20° on the north face, below the current grades.

The concrete was tested (non-destructively) with a rebound hammer[4] manufactured by NDT James Instruments Inc. The hammer was operated in a horizontal position on both faces of the wall and a total of 50 soundings were completed. The values achieved ranged from 32-48 with an average for all soundings of 38; corresponding to a compressive strength of 4,500 psi (range 3,400-6,000). The surface condition of the concrete is good with some minor cracking and no indication of major spalling, delamination, or failure of the concrete mass.

The wall was analyzed to determine the stability of the structure under the proposed conditions. This includes the current geometry/configuration without the additional resisting load of soil/water at the base of the southern face. This analysis is also provided to confirm the wall is generally stable as configured.

The structure was analyzed through a limit-equilibrium methodology utilizing Coloumbs method of earth pressures. The worst-case loading scenario was analyzed to ascertain the condition of the wall post dam removal: this included a HS20 loading condition immediately adjacent to the wall.

The structure is considered to be a rigid and brittle monolithic freebody founded on low-elasticity bedrock with a maximum persistent water level of two feet above wall bottom on the landward side of the structure. Waterward the structure is freestanding from the base. The maximum height of wall was considered (14 feet) in accordance with a maximum sediment thickness/water depth of eight feet below existing streambed.

Analysis parameters have been estimated utilizing published values and correlation tables in conjunction with field observed conditions and the log of boring[5] completed for the construction project upstream along Route 72. Conservative values of analysis parameters were utilized due to the lack of adequate strength parameter information. All analysis was conducted with “at rest” earth pressures as the deflection required to mobilize “active” or “passive” pressure (0.3 inches) is not likely to occur with a thick sectioned concrete structure like this.

---

[3] The compound batter was observed in pictures taken from the construction area upstream of the dam. The actual angle was not measured in the field, as it was not accessible.

[4] Model Number W-M-250, Serial Number 40401-87923

[5] Relocation of Route 72 – Retaining Walls, BSW-107-1, Sta 100+100

Table 3. Analysis parameters.

Parameter	***Value***
Dry Soil Density (γ) (pcf)	120
Saturated Soil Density (γ') (pcf)	138
Cured Concrete Density (γ_c) (pcf)	150
Density of Water (γ_w) (pcf)	62.4
Shear Strength (θ) (degrees)	28
Cohesion (c) (psf)	0
Adhesion (concrete/rock) (δ_r) (psf)	0.7
Earth Pressure Coefficent (at rest) (K_o)	0.53

The following stability criteria are utilized in this analysis (adapted from USACE EM 1110-2-2502):

Table 4. Stability Criteria.

Loading Condition	***Sliding Factor of Safety, FoS***	***Overturning Criteria***		***Bearing Capacity FoS***
		Minimum Base Area in Compression	***Overturning FoS***	
Unusual	1.33	50%	1.5	2.0

The overall condition of the wall has been determined to be satisfactory and it is determined that the wall will be serviceable after removal of the dam with stability criteria within those outlined above without the need for remedial repair/strengthening of the wall. Calculations and data sheets are provided as part of Appendix A to this report.

This incremental analysis of the structure was to determine the change in the loading conditions as a result of lowering of the water surface following removal of the dam. The analysis is not intended, nor does it propose to, assess the original design of the wall section. The results of the analysis reveal that no significant change in the stresses at the wall will result with the removal of the dam.

In response to additional comments from Connecticut DOT dated 4/20/2011, a revised and updated analysis of the retaining wall in accordance with Allowable Stress Design and Load Resistance Factor Design methodologies was completed and is included in Appendix A. The result of the analysis reveals that the wall will remain stable post dam removal.

Construction Recommendations

Several measures are proposed to protect and ensure the long-term stability of the retaining wall and other adjacent structures after dam removal. During the construction of the wall it will be necessary to monitor the highest section of free standing wall for movement. This may include surface mounted electronic instrumentation or manual measurement of the wall. The methodology shall be accurate enough to measure angular movement to hundredths of a degree and/or distances to hundredths of an inch. Any non-corrected movement will be considered unsuitable and will trigger the need for remedial repair action requiring cessation of project work and the temporary bracing of the wall with timbers or other suitable materials.

Upon dam removal and water lowering, the interface between the concrete retaining wall and bedrock will be exposed. Due to the irregularity of the bedrock along this section of the river, areas of the contact, between the wall and rock, will be exposed, submerged, or cyclically exposed. As per CTDOT, the interface between the wall and underlying bedrock will be visually inspected after sediment excavation. Any voids or areas of poor contact between the retaining wall and underlying bedrock will be grouted. In addition, riprap stabilization will be installed along the toe of the retaining wall.

To protect the remaining portion of the concrete apron below the Middle Street Dam that extends under the Middle Street Bridge, a reinforced concrete cutoff wall has been proposed. When the dam is removed the remaining concrete apron will be saw cut along its upstream edge prior to the installation of the proposed reinforced concrete cutoff wall.

5. Fish Passage

The primary goal of this project is to improve diadromous fish passage conditions on the Pequabuck River. Target fish species include diadromous fish species such as Atlantic salmon, American shad, river herring (both alewife and blueback herring), sea lamprey, American eel, white perch, as well as riverine species such as trout and white sucker.

A wide variety of resident and diadromous fish have the potential to get to the base of the Middle Street Dam, including sea lamprey, American shad, alewife, blueback herring, American eel, and resident trout. This means that multiple riverine and diadromous fish species will benefit from the removal of the Middle Street Dam. No other dams exist on the Pequabuck River downstream of the Middle Street Dam; however, two partial obstructions to fish passage exist and one large dam with a working fish ladder on the Farmington River downstream of its confluence with the Pequabuck. The large dam is the Rainbow Dam and it is the first dam on the Farmington River. Its fishway is actively maintained and managed by the CT DEEP. The second structure on the Farmington is the breached Spoonville Dam, which is passable under many flows, but, is a partial or full barrier to some migratory fish under certain flows. The final structure before the Farmington River's confluence with the Pequabuck River is the Winchell-Smith Dam, which is a low head dam and likely only creates a partial barrier to fish passage. Princeton Hydro recently completed designs for fish passage improvements at both the Spoonville and Winchell-Smith Dam sites for the Farmington River Watershed Association to fully restore unobstructed fish passage at the two sites. It is likely that these two downstream fish passage enhancement projects will be fully constructed prior to the removal or modification of the Middle Street Dam, ensuring full unobstructed access to the site.

Target fish passage velocities and water depths, as well as migration periods, are included in the Fish Passage Requirements for the Farmington River table included in Appendix B of this report (as modified from the Naugatuck River Anadromous Fish Improvement Project Final Report by Milone & MacBroom, Inc). Results of the Hydrology and Hydraulics Analysis will be used to inform fish passage in post-removal conditions.

6. Hydrology & Hydraulics Analysis

Initial hydrologic and hydraulic analysis was completed as part of Middle Street Dam Removal Feasibility Assessment Pequabuck River Bristol, Connecticut (2010). That analysis has been updated and revised and is described herein. This analysis is intended to satisfy CTDEEP permits but will need to be expanded to complete a Letter of Map Revision (LOMR). The purpose of the analysis is to inform feasibility of the design by assessing changes in flood elevations, fish passage conditions, as well impacts to adjacent structures. Storm flow conditions were examined to identify changes to the upstream water surface elevation during high flows under post dam removal conditions.

Hydrology

Given the range of flows necessary to inform project design and objectives, several data sources were utilized to establish hydrologic conditions for the project. Related data is included in Appendix C.

Methodology

For low flow data, the upstream USGS gage (01189000 PEQUABUCK RIVER AT FORESTVILLE, CT) was utilized. Median Daily Mean Discharge (DMD) data for the period of record (69 years) was obtained via the USGS website, and was analyzed to identify flow values for specific conditions. Specifically, 50th percentile (median) of DMD values for each day were examined to determine monthly median values (i.e April, May, June, etc.) for time periods of specific interest for fish passage. DMD values were then further analyzed to determine 90th percentile values for the range of April 15 through June 30, as requested by the CTDEP Fisheries Biologist. Because of the close proximity of the USGS gage to the project site, the flow values can be confidently used at the Middle Street Dam with no transposition or adjustment necessary.

For storm flows, both USGS StreamStats, and the existing FEMA Flood Insurance Study (FIS), dated September 2008, were utilized to obtain flow values for various storm events including the 10-, 50-, 100-, and 500-year recurrence interval events. Specifically, from the FIS, flow values were linearly interpolated based on drainage area for this reach of the Pequabuck River, between Mellon Street (approximately 0.75 miles upstream of the dam) and the confluence of Copper Mine Brook. These flows are comparable to the flows utilized by CTDOT, and are listed in the following table.

Results

Based on the above analyses, the following flows shown in Table 1 below were determined and utilized for the subsequent hydraulic analysis. Additional relevant hydrologic data are included in Appendix C.

Middle Street Dam Removal Feasibility Hydrology Summary		
Statistic	***Discharge (cfs)***	***Description***
PK2	889	Maximum instantaneous flow that occurs on average once in 2 years
PK10	1990	Maximum instantaneous flow that occurs on average once in 10 years
PK25	2640	Maximum instantaneous flow that occurs on average once in 25 years
PK50	3280	Maximum instantaneous flow that occurs on average once in 50 years
PK100	3880	Maximum instantaneous flow that occurs on average once in 100 years
PK500	5270	Maximum instantaneous flow that occurs on average once in 500 years
FEMA 10-yr	2372	10-yr peak discharge from FIS (c/o CTDOT)
FEMA 50-yr	4431	50-yr peak discharge from FIS (c/o CTDOT)
FEMA 100-yr	5594	100-yr peak discharge from FIS (c/o CTDOT)
FEMA 500-yr	9140	500-yr peak discharge from FIS (c/o CTDOT)
CTDOT 2-yr	1090	2-yr peak discharge from CTDOT
CTDOT 10-yr	2560	10-yr peak discharge from CTDOT
CTDOT 50-yr	4690	50-yr peak discharge from CTDOT
CTDOT 100-yr	5840	100-yr peak discharge from CTDOT
CTDOT 500-yr	9140	500-yr peak discharge from CTDOT
SCEL	5200	Stream Channel Encroachment Line (c/o CTDOT)
90thAPR-JUN	175	90th percentile of the DMD for April 15 through June 30

Table 1. Stream Discharge under various scenarios

Hydraulics

In order to perform the hydraulic analysis, various existing data were compiled to represent the geometry of the Pequabuck River, under both existing conditions and post dam removal conditions. It should be noted that the existing hydraulic model data available from FEMA for this reach (dated HEC-2 study) was not of sufficient detail within the vicinity of the dam, and as such it was necessary to create an entirely new hydraulic model. Results from the above hydrologic analysis were utilized in the hydraulic analysis. Hydraulic modeling data is included in Appendix D.

Methodology

Existing topographic survey information obtained by GM2 Associates, Inc. was utilized to define in-stream cross-sectional geometry for the subject stream reach. Aerial topographic data obtained from the CTDEP was used to append the in-stream topography for areas outside of the edge of water. These data were combined and pre-processed using the USACE HEC-GeoRAS. This interface allows the preparation of geometric data within the ArcGIS platform for import

into HEC-RAS. Geometry of river left over bank areas, including the retaining wall, were further updated following construction work along Route 72. However, the more recent construction of the new Route 72 bridge over the Pequabuck, approximately 1000 LF downstream of the Middle Street Dam is not depicted in the current geometry, but will likely be incorporated in the LOMR process.

For this hydraulic model, 28 cross-sections from Station 1464 (approximately 1000 ft upstream of the subject dam) to Station 0 (limit of detailed topography) were utilized as representative of the geometry of the Pequabuck River through this reach. Within this modeling reach, Station 420 is identified at the existing Middle Street Dam. The Manning's roughness coefficients, 'n', for the stream channel and overbanks were assigned to each cross section. These 'n' values were evaluated and assessed from Princeton Hydro's site visits, with horizontal variation as necessary due to bank vegetation (0.08), and channel substrate (0.035).

The Middle Street Dam under existing conditions was defined using an in-line structure. Under post dam removal conditions, geometry at all sections in which sediment removal is anticipated were adjusted to detail both the dam removal as well as proposed dredging. Approximate bedrock elevations estimated through the excavation of test pits with backhoe, both throughout the reach and at the dam location, were utilized to adjust anticipated post removal conditions. Additionally, as the previous abandoned pipeline located approximately 500 ft upstream of the existing dam has been removed subsequent to the topographic survey, both existing and post-removal conditions reflect this change.

The HEC-RAS model utilized in this study was a one-dimensional, steady peak flow, mixed flow analysis, using flows generated from the hydrologic analyses. Both existing conditions and post-dam removal conditions were analyzed with the geometry modifications as described above. Both upstream and downstream boundary conditions were set to normal depth using a slope value obtained from the FEMA FIS profiles. For all model runs, the energy, steady flow, standard step modeling procedure with mixed flow conditions was utilized to determine the water surface profile.

Results

Relevant results including stage discharge relationships, WSEL, depths, and velocities for each model run are included as appendices to this report. Minimum depths of 1 FT and maximum velocities of less than 6 FPS during low flows of the fish passage period are considered to be generally sufficient to accommodate a range of migratory fish.

Bedrock elevations were estimated throughout the impoundment following mechanical excavation of test pits. A 1-2' bedrock ledge, which reportedly exists beneath the existing dam, would be backwatered from downstream conditions, which include Middle Street bridge and a narrow stream section downstream of bridge, according to model results.

It is noted that the modeled WSEL during the FEMA FIS flows is higher than the reported values in the FIS. This is most likely due to modeled conditions geometry in the completed model accounting for sediment deposition (and subsequent effects on hydraulic capacity) at both the Middle Street Bridge, and the downstream narrowed stream channel. Given the age of the

study, conditions in the FEMA study most likely did not take this sedimentation into account. Additionally, influence by lack of sufficient topographic data at the bridge section on river left (and subsequent modeling as a vertical wall) has led to an increase in WSEL during larger storm events.

Calculated maximum average velocities for the modeled fish passage flows within the proposed modified reach (existing impoundment) are less than 5.8 fps, while calculated depths are greater than 1 ft. As compared to the Fish Passage Requirements included in Appendix B, these maximum velocities do not exceed the burst speeds of the species of concern in the adult life stage. In addition, the water depths are adequate for the species of concern in all life stages. These results suggest that the anticipated post-removal conditions will successfully pass species of concern over the range of modeled flows.

Design Recommendations

Calculated maximum shear stresses for the range of modeled flows approach 6-8 pounds per square foot (psf). These values are consistent with critical shear stresses associated with small to medium sized boulders (>10-20" diam.). As such stone placed along the toe of the retaining wall in the proposed design are recommended to be minimum 30" diameter to account for localized instantaneous peak velocities/shear stresses, and lend confidence in the overall stability of any proposed stabilization.

As requested by CTDOT, National Cooperative Highway Research Program Report 568 was consulted for additional riprap sizing guidance. The recommended USACE methodology (Maynard, et al.) resulted in a D_{50} of 30", consistent with Class VIII riprap, applied at a thickness of 60" (i.e. D_{100}). Supporting calculations are provided in Appendix E.

NCHRP Report 568 also recommends filters (either geotextile fabric or granular filter) to prevent migration of underlying fine grained soils into the riprap revetment. It also specifically states that in cases where base soil is primarily relatively large particles (coarse sands and gravels), a filter layer may not be necessary. The underlying material on which the riprap is to be placed is made up of bedrock, or very coarse weathered parent material. Further, such a filter layer could provide a slip surface and result in sliding and instabilities in the overall revetment. As such, a filter layer is not proposed for this stabilization.

To facilitate sediment excavation, the impoundment will be fully dewatered with a cofferdam and gravity pipe to bypass stream flow. The proposed diversion pipes have been sized to convey the 90th percentile flow of 86 CFS during the period of July-August-September – the planned construction window corresponding to low stream flows. Given the relatively short time frame of construction (~90 days total) and less than 30 days for the temporary diversion piping, this was considered conservative. CTDOT Drainage Manual, Section 6.15, and associated Appendix F, was consulted; however, the recommended 2-yr frequency design storm is infeasible for bypass operations. The 2-yr flow is in excess of 1,000 CFS, and would require four (4) 8-ft diameter pipes for bypass conveyance, occupying approximately 40' of width, or nearly the entire area to be dredged. Instead, we have provided for two (2) 48" pipes and cofferdam diversion and specified that (i) the construction shall take place during low-flow periods, (ii) the cofferdam shall be constructed to withstand over-topping flows, and (iii) if high flows do occur,

additional time will be required for further dewatering and site stabilization. Hydraulic modeling was utilized to determine that the top of cofferdam must be set at elevation 246' to safely capture this flow (86 CFS). Related calculations are included in Appendix F.

7. Permitting

Project partners held a pre-application meeting with representatives from CTDEEP and CTDOT in December 2012 to identify the permits that would be required for full removal of the Middle Street Dam. This report intends to serve as supporting documentation for these permits. A Highway Encroachment Permit from CTDOT is required for the project to move forward regardless of CTDEEP approvals.

1. *CT DEEP Bureau of Water Protection and Land Reuse Permits*
    a. Inland Water Resources Division:
        i. *401 Water Quality Certification* (regulates activities that may result in any discharge into navigable waters)
        ii. *Dam Construction Permit*
        iii. *Flood Management Certification* (regulates actions in or affecting floodplains)
    b. *Materials and Waste Management Division*:
        i. *General Permit for Contaminated Soil and/or Sediment Management* (Staging and Transfer)
2. *US Army Corp of Engineers General Permit*
3. *FEMA Letter of Map Revision (LOMR)*
4. *CTDOT Encroachment Permit*

If the CT DEEP moves to approve the permit, a Notice of Tentative Determination to approve the application is published and distributed to the public, the Inland Fisheries Division, wetland agencies, and the planning, zoning, and conservation commissions of each town affected by the project. The applicant does not need to seek separate approval from the local commissions (i.e. Bristol Conservation / Inland Wetland & Watercourses, Planning, or Zoning Commissions) because a CT DEEP Dam Construction Permit precludes a local permit. CCRPA has received approval from the Historic Preservation and Museum Division of the Connecticut Commission on Culture and Tourism stating that no historic properties will be affected by the dam removal and the project can proceed as proposed. No endangered, threatened or special concern species or significant natural communities are located in the vicinity of this project or within the range of influence in upstream or downstream reaches, according to the CT DEEP Natural Diversity Database.

Appendix A:

Geotechnical Calculations and Supplemental Geotechnical Memorandum

Princeton Hydro, LLC
Scientists and Engineers

Project No.: 1036.0004	Sheet 1 of 6
Project: Dam Removal - Ret. Wall stability	
Subject: Ret. Wall stability	
Computed By: GWA	Date: 8/20/2010
Checked By: KJM	Date: 8/20/10

Assume dam is removed, retained soils are saturated, and surcharge loading from tri-axle LOAD TRIAXLE ± 3' from wall edge. Use Coulomb's Earth Pressure Theory WITH static Earth Pressure co-efficient

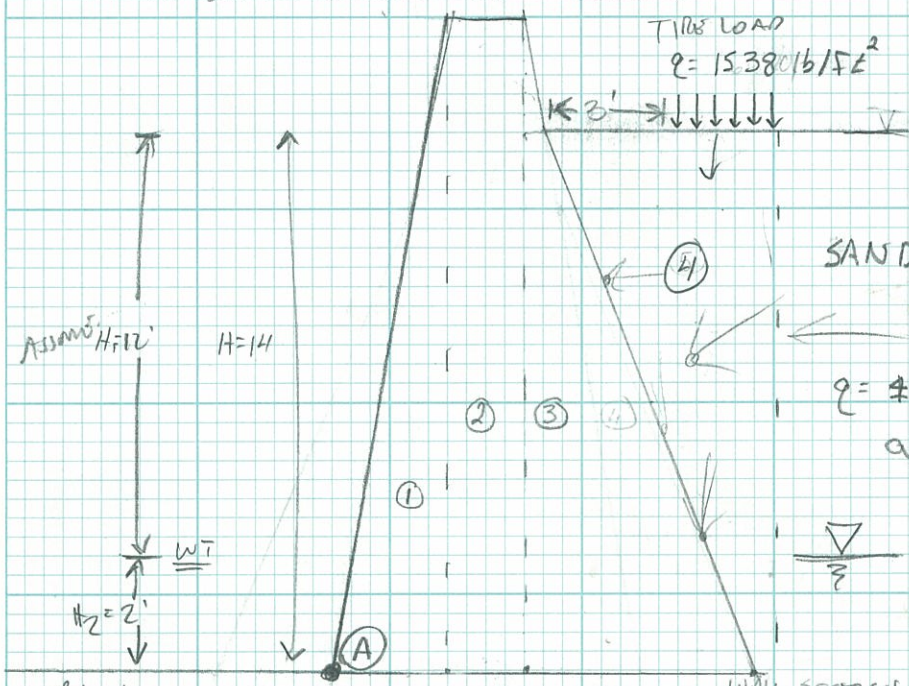

SOIL PARAMETERS ESTIMATED FROM DM 7.2

SAND $\phi = 28$ (32) $\gamma'_{sat} = 138$ lb/ft³ $\gamma = 120$ lb/ft³ (110) $\phi'_2 = 22$

q = ½ triaxle truck axle = 20,000 lb set 10' apart

$$\frac{20{,}000}{10\,ft \times 1.3\,ft} = 1538\ lb/ft$$

ϕ_2 Rock = 40° [GEIM, 1984]

$C_{ROCK} = 0.7$

$K_a = 1 - \sin\theta = 1 - \sin 28 = 0.53$ (AT REST)

$$P_0 = K_0 q H + \tfrac{1}{2} K_0 \gamma H_1^2 + K_0 \gamma H_1 H_2 + \tfrac{1}{2}(K_0 \gamma' + \gamma_w) H_2^2$$

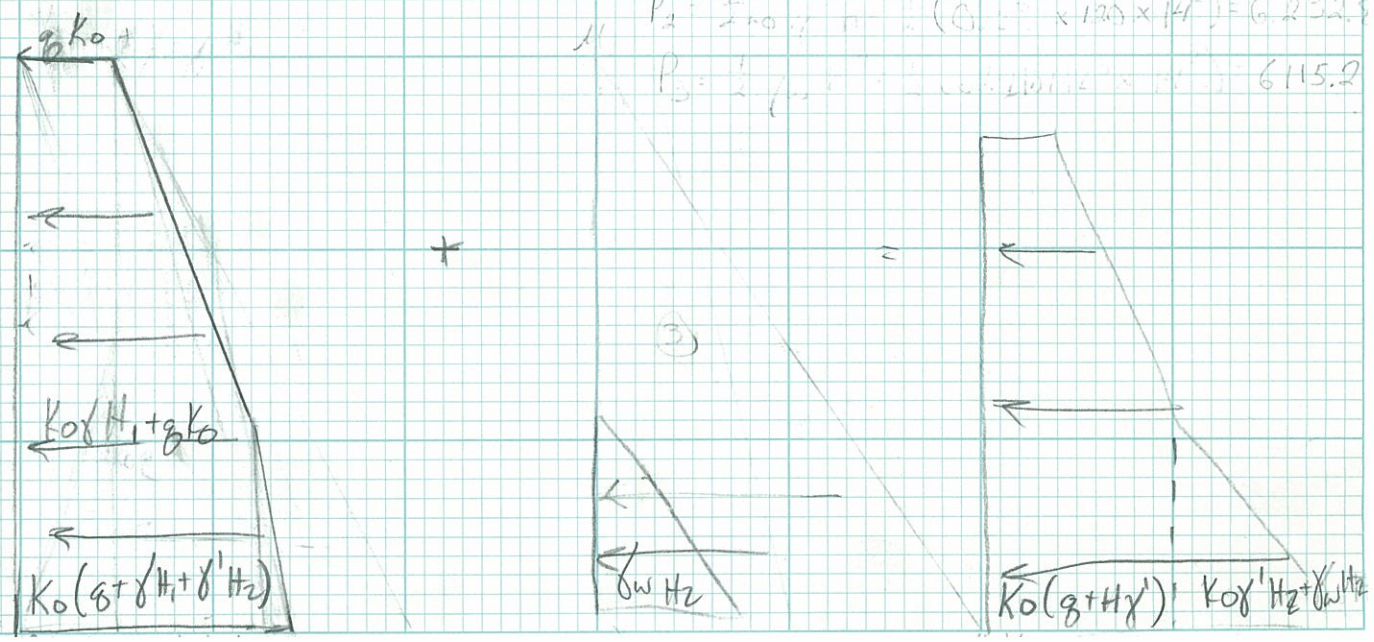

Princeton Hydro, LLC
Scientists and Engineers

Project No.: 1036.004	Sheet 2 of 6
Project: Dam Removal	
Subject: Ret wall stability	
Computed By: GWB	Date: 8/20/2010
Checked By: JSM	Date: 8/20/10

$P_0 = (0.53 \times 1538 \times 14) + \frac{1}{2}(0.53 \times 120 \times 12^2) + (0.53 \times 120 \times 12 \times 2) + \frac{1}{2}(0.53 \times 138 * 62.4 \times (2)^2)$

$P_0 = 11412 + 4579.2 + 1526.4 + 212.4$

$P_0 = 17,730$

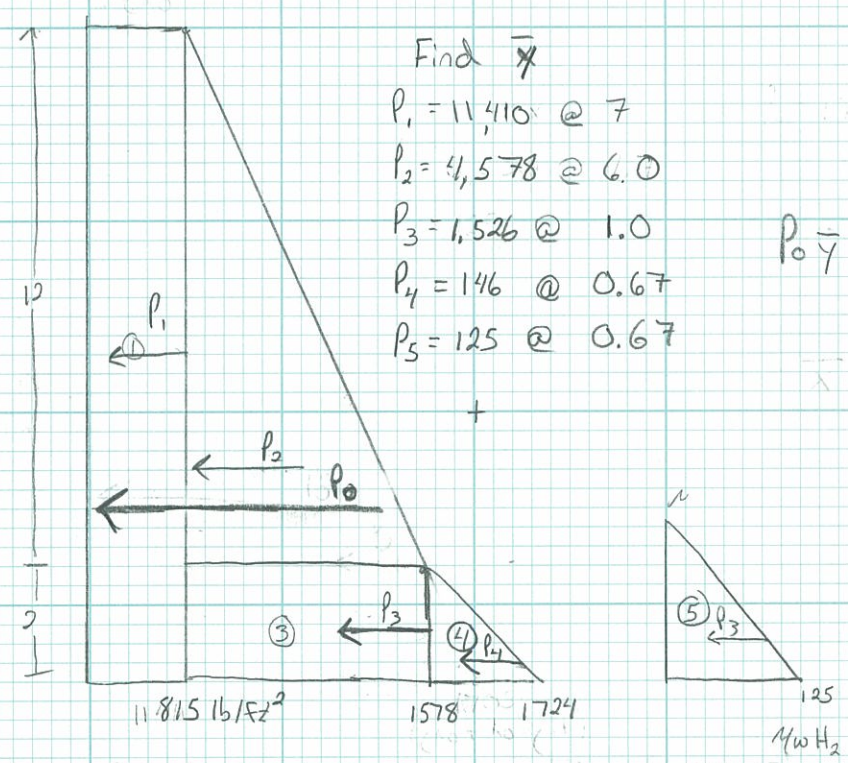

Find $\bar{y}$

$P_1 = 11,410$ @ 7

$P_2 = 4,578$ @ 6.0

$P_3 = 1,526$ @ 1.0

$P_4 = 146$ @ 0.67

$P_5 = 125$ @ 0.67

+

$P_0 \bar{y} = P_1 y^1 + P_2 y^2 + P_3 y^3 + P_4 y^4 + P_5 y^5$

$= \frac{117056}{17,730}$ $\bar{y} = 6.6$

Moment Resisting ΣM_R $\gamma_{concrete} = 150$ lb/ft³

Section	Weight (lb/ft)	Moment Arm from A	Moment (lb·ft)
1	3,825	2	7,650
2	5100	4	20,400
3	7012.5	9.2	64,305
4	4,200	9.33	39,200
V_{φ} ↓	(1538×5.5) = 8,459	9.33	78,922
$P_{w_{uplift}}$ ↑	$\frac{1}{2}$(125×11) = 687.5 (−)		

$\Sigma M_R = 210,477$ lb·ft

$\Sigma V = 24,087$ lb

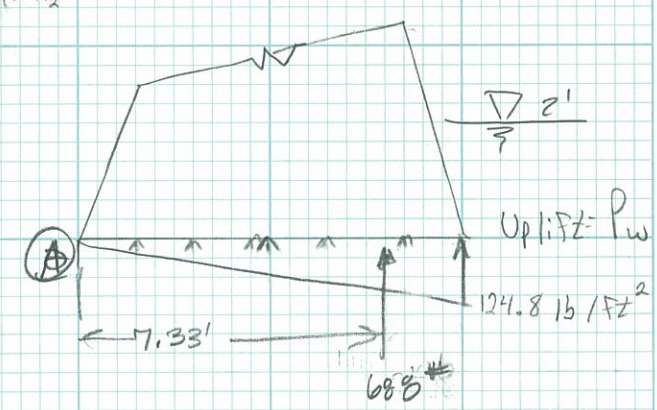

Princeton Hydro, LLC
Scientists and Engineers

Project No.: 1038.004	Sheet 3 of 6
Project: Dam Removal	
Subject: Ret. Wall Stability	
Computed By: GWA	Date: 8/20/2010
Checked By: KJM	Date: 8/20/10

Overturning Moment

ID	Force	Moment arm	Moment
P_o	17,730	6.58	116,663
P_{wo}	687.5	7.33	15,037
P_i			

$\Sigma M_o = 121,700$ #ft

$$FS \frac{\Sigma M_R}{\Sigma M_o} = \frac{216477 \text{ \#ft}}{121700 \text{ \#FT}} = \boxed{1.7} > 1.5 \text{ OK}$$

Factor of Safety Sliding

(GEIM)
$C = 1,433$ psf $= 0.7$ kg/cm^2
$\phi = 40°$

EFFECTIVE CONTACT LENGTH: ($\bar{x}$)

$$L' = \frac{5977}{(5977+1038)} \times 11 = 9.4' = \bar{x}$$

$$FS_{(slide)} = \frac{N' \tan \phi_R + CL}{P_{o\#}}$$

$$= \frac{(26,211 \text{ \#} \quad \tan) + (1,433 \times 9.4')}{17,730 \text{ \#}}$$

$$= \frac{33682 \text{ \#}}{17,730 \text{ \#}}$$

$$FS_{slide} = \boxed{1.9} > 1.33 \text{ OK}$$

Coeff. of Adhesion = 0.7
[DM 7.2-63]

$C = 0.7$ kg/cm^2 or 1433 lb/ft
[GEIM, Hunt 1984]

L' (Base Length for compressive zone)

Princeton Hydro, LLC
Scientists and Engineers

Project No.: 1038.001	Sheet 4 of 6
Project: Dam Removal - Mill St.	
Subject: Ret. Wall stability	
Computed By: GWA	Date: 8/20/2010
Checked By: VJM	Date: 8/20/10

Bearing Capacity - Concrete to Rock ✓

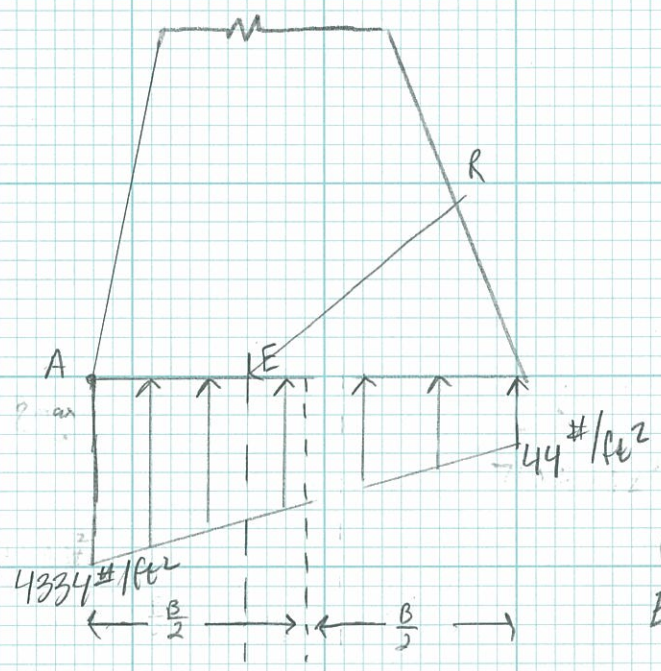

OK ✓

BASE - 100% Compression > 50%

$R = \Sigma V + P_h = 24{,}087\ lb + 17{,}738 = 41817\ \#$

$M_{net} = \Sigma M_R - \Sigma M_o = 210{,}477 - 121{,}700\ lb \cdot ft = 88{,}777\ \#\ ft$

$\overline{AE} = \bar{x} = \frac{M_{net}}{\Sigma V} = \frac{88{,}777\ lb \cdot ft}{24{,}087\ \#} = 3.7'$

Eccentricity

$e = \frac{B}{2} - \overline{AE} = \frac{11}{2} - 3.7 = 1.8' < \frac{11}{6} = 1.83$ OK ✓

$q_{toe} = \frac{\Sigma V}{B}\left[1 + \frac{6e}{B}\right] = \frac{24087}{11}\left[1 + \frac{6(1.8)}{11}\right] = 2189.7\left[1.98\right] = 4334\ \#/ft^2$

$q_{heel} = \frac{\Sigma V}{B}\left[1 - \frac{6e}{B}\right] = \frac{24087}{11}\left[1 - \frac{6(1.8)}{11}\right] = 2189.7\left[0.02\right] = 438\ \#/ft^2$

Rock Type - Moderate Strength, = 200,000 lb/ft²

484 + 23595 = 24079 #

$FS = \frac{200{,}000\ lb/ft^2}{24{,}079\ \#/ft^2} = 8.3$ OK ✓

Princeton Hydro, LLC
Scientists and Engineers

Project No.: 1038.004	Sheet 5 of 6
Project: Dam Removal - Mill St.	
Subject: Ret. Wall stability	
Computed By: GWA	Date: 8/20/10
Checked By: KJM	Date: 8/20/10

References

- Geotechnical Engineering Investigatio Manual, Ray E. Hunt, 1984
- Soil Mechanics Design Manual 7.01, Naval Facilities Engineering Command, 1986
- Principles of Foundation Engineering, 6th Edition, Das 2007

Princeton Hydro, LLC
Scientists and Engineers

Project No.: 1034.004	Sheet 6 of 6
Project: Dam Removal - Ret. Wall Stability	
Subject: Ret wall stability	
Computed By: GWA	Date: 8/20/2010
Checked By: KJM	Date: 8/20/2010

Retaining Wall - Route 72
Bristol - Plainville

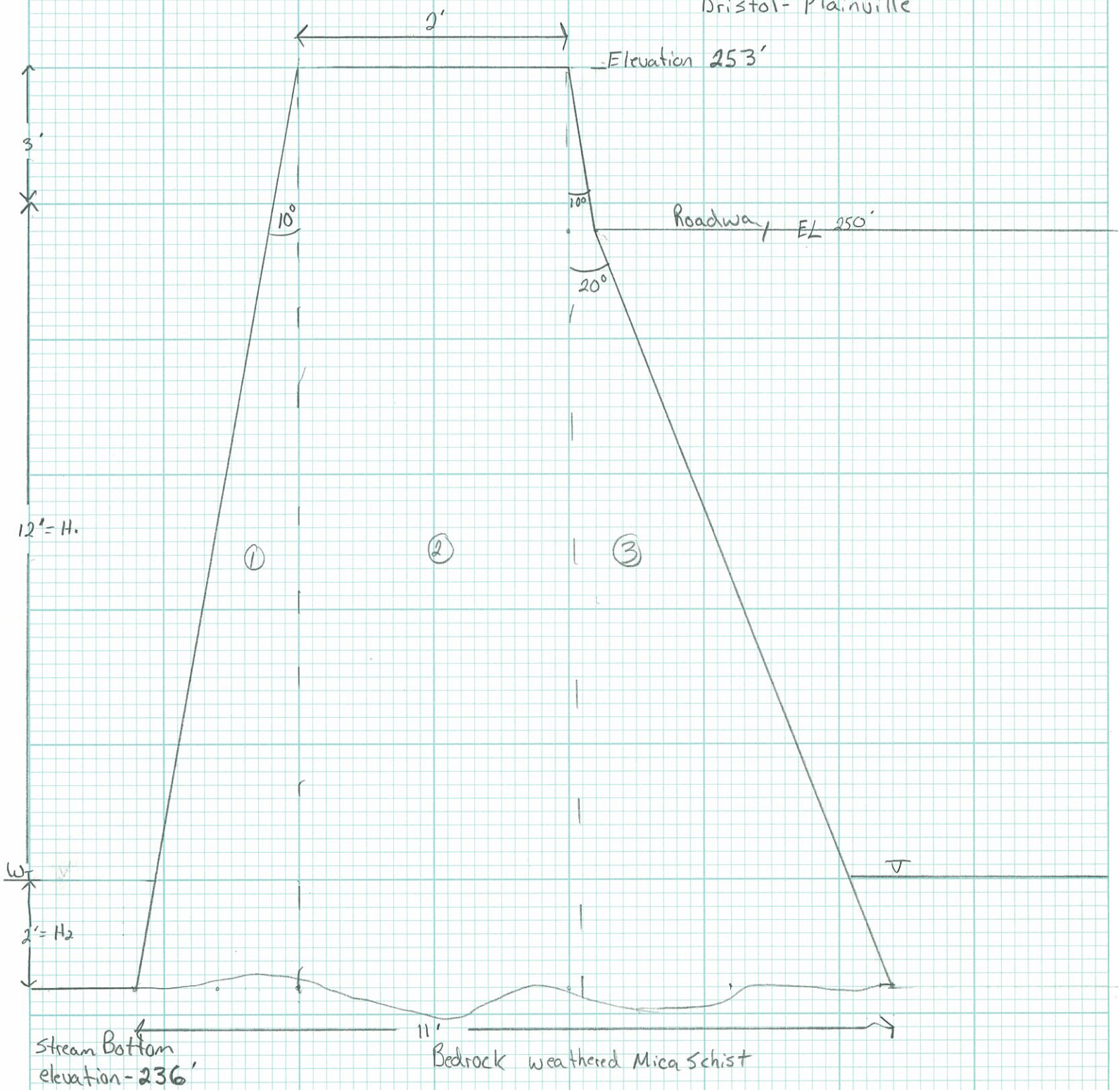

Memorandum

To: Laura Wilman, PE
CC: Geoffery M. Goll, PE
From: Keithe J. Merl, PE
Date: May 25, 2012
RE: ASD and LRFD Analysis
Existing Retaining Wall
MIddle Street Dam
City of Bristol
Plainville, Connecticut
pH 1036.004

Scientists, Engineers & Environmental Planners Designing Innovative Solutions for Water, Wetland and Soil Resources Management

I have completed an updated and revised analysis of the retaining wall in accordance with Allowable Stress Design (ASD) and Load Resistance Factor Design (LRFD) methodologies. This revised analysis was completed in response to the request of ConnDOT.

The analysis details are included in the calculation sheets included in this memo. The results of the analysis reveals the wall will remain stable post dam modification. The analysis assumes that there is no water or soil resistance downstream of the wall, the soil will be acting against the wall in the "at-rest" condition, and groundwater of two (2) feet will remain behind the (post modifications).

AASHTO LRFD methodology is still in heavy development by all interested parties and this included analysis attempts to provide a LRFD analysis in compliance with the latest standards and requirements. It is noted that no LRFD values pertinent specifically to Connecticut were not available at the time of this analysis.

The results of the analysis reveals the wall will remain stable post modifications in accordance with both methodologies.

In response to concerns at the interface of the retaining wall and the bedrock it is proposed to provide rip-rap or similar armoring to provide resistance to abrasive water forces, abrasive suspended bed load abrasion, insulation to reduce the amount of freeze-thaw damage, and reduce the flow velocities along the wall. The armor has been sized to prevent unintended migration downstream during storm events.

References and Notes

Coulomb's Earth Pressure Theory w/ Static Earth Pressure Coefficient

Tire load based on 20000 lb. Tri-axle truck, axle's 10 ft apart, and a 1.3 ft wide tire.

Ref.

1. *Geotechnical Engineering Investigation Manual*, Roy E. Hunt, 1984

2. *Principles of Foundation Engineering,* 6th Edition, Das 2007

3. *Soil Mechanics Design Manual*, 7.01, Naval Facilities Engineering Command, 1986

4. *Principles of Geotechnical Engineering*, 4th Edition, Das 1998

5. *Retaining and Flood Walls*, Army Corps of Engineers Design Manual, EM 1110-2-2502, 1989

6. Relocation of Route 72 – Retaining Walls, BSW-107-1, Sta 100+100

7. AASHTO LRFD Bridge Design Specifications, Customary U.S. Units, 6th Edition, 2012.

This calculation sheet is provided to detail the analysis of the existing retaining wall at the Middle Street Dam project. In conjunction with requests from the State this analysis implements the latest revisions of the American Association of State Highway and Transportation Officials Load and Resistance Factor Design (AASHTO LRFD) methodology to the maximum extent practicable in the context of the analysis.

Analysis parameters utilized in this analysis have been estimated utilizing published values and correlation tables in conjunction with field observed conditions and the log of borings (ref. 4) completed for the construction project upstream along Route 72. Conservative values are utilized due to the lack of adequate testing data.

The Allowable Stress Design (ASD) methodology is conducted with "at rest" earth pressures; the deflection required to mobilize "active" pressure is (0.3 inches). This amount of deflection is not likely occur with a thick sectioned concrete structure such as this. Figure 1 is a dimensional sketch of the retaining wall.

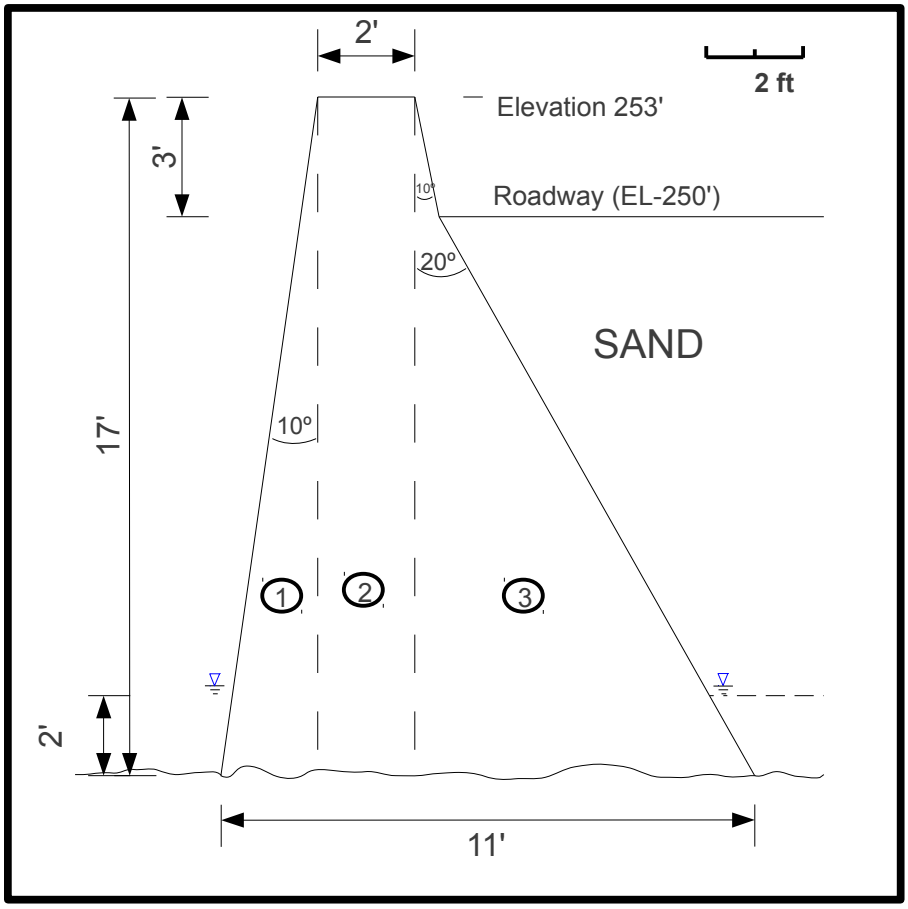

Figure 1: Retaining Wall Sketch

References and Notes

STABILITY - POST DAM REMOVAL.

Bedrock observed in a test pit investigation preformed by pH in the stream bed.

Based on the available information it is inferred, derived, and/or assumed that the retaining wall is underlain by *bedrock*, a weathered mica schist determined as the result of test pits advanced until refusal. The wall is backfilled with generally well-graded sand materials, observed present in exposed excavation cuts along route 72.

Ref 3. Figure 7, pg. 7.1-149

Soil Parameters - Sand

Unit Weight above the water table (pcf): $\gamma_{unsat} := 120$

Unit Weight below the water table (pcf): $\gamma'_{sat} := 138$

Friction Angle unsaturated: $\Phi := 28\,deg$

Friction Angle saturated: $\Phi_{sat} := 22\,deg$

Ref 1. Table 3.27

Bedrock

Friction Angle: $\Phi'' := 40\,deg$

Coefficient of Cohesion (psf): $c := 1433$

Unit weight of bedrock (pcf): $\gamma_{rock} := 124.8$

Force per Unit Width of Retaining Wall

Ref 4. Eq. 10.3, pg 433 (Jaky, 1944)

Ref 4. eq. 10.17, pg 441 (Rankine)

Tire Load (psf): $q := 1538$

Coefficient of at rest earth pressure: $K_o := 1 - \sin(\Phi) = 0.5305$

Coefficient of active earth pressure: $K_a := \tan^2\left(45\,deg - \frac{\Phi}{2}\right) = 0.3610$

Unit weight of water (pcf): $\gamma_w := 62.4$

Unit weight of concrete: (pcf): $\gamma_{conc} := 150$

Wall height (ft): $H := 14$

Top of wall to saturated zone (ft): $H_1 := 12$

Length of wall in saturated zone (ft): $H_2 := 2$

Width of wall base (ft): $B := 11$

Table 1: LFRD Load Factors

Group	Dead Load	Vertical Earth Pressure	Vertical Surcharge	Horizontal Surcharge	Horizontal Earth Pressure
Strength I-a	$F_1 := 0.9$	$F_2 := 1.00$	$F_3 := 1.75$	$F_4 := 1.75$	$F_5 := 1.50$

References and Notes

Driving Earth Forces

Total force per unit width (unfactored):

$$P_o := K_o \cdot q \cdot H + \frac{1}{2} \cdot K_o \cdot \gamma_{unsat} \cdot H_1^2 + K_o \cdot \gamma_{unsat} \cdot H_1 \cdot H_2 + \frac{1}{2} \cdot (K_o \gamma'_{sat} + \gamma_w) \cdot H_2^2$$

$$P_o = 1.781 \times 10^4$$

Total force per unit width (factored):

$$P_{of} := F_3 \cdot K_o \cdot q \cdot H + \frac{1}{2} F_5 \cdot K_o \cdot \gamma_{unsat} \cdot H_1^2 + F_5 \cdot K_o \cdot \gamma_{unsat} \cdot H_1 \cdot H_2 + \frac{1}{2} F_5 \cdot (K_o \gamma'_{sat} + \gamma_w) \cdot H_2^2$$

$$P_{of} = 2.957 \times 10^4$$

Total force per unit width (active, unfactored):

$$P_a := K_a \cdot q \cdot H + \frac{1}{2} K_a \cdot \gamma_{unsat} \cdot H_1^2 + K_a \cdot \gamma_{unsat} \cdot H_1 \cdot H_2 + \frac{1}{2} (K_a \gamma'_{sat} + \gamma_w) \cdot H_2^2$$

$$P_a = 1.216 \times 10^4$$

Total force per unit width (active, factored):

$$P_{af} := F_3 \cdot K_a \cdot q \cdot H + \frac{1}{2} F_5 \cdot K_a \cdot \gamma_{unsat} \cdot H_1^2 + F_5 \cdot K_a \cdot \gamma_{unsat} \cdot H_1 \cdot H_2 + \frac{1}{2} F_5 \cdot (K_a \gamma'_{sat} + \gamma_w) \cdot H_2^2$$

$$P_{af} = 2.018 \times 10^4$$

See Figures 2 and 3 (below) for depiction of loads and geometry.

During the analysis of the driving forces in the LRFD methodology the factors a applied to artificially increase the load applied to the wall. The method specifically refers to an increase in an active earth coefficient. Inspection of the factored lateral load that would be considered for an at rest earth pressure is unreasonably high. Therefore, this analysis utilizes at rest earth coefficient for the calculation in the ASD, the result is that in order to account for a reasonably factored load the active earth force is used in the factored analysis of this structure.

All moments are calculated around point A, refer to Figure 1.

References and Notes

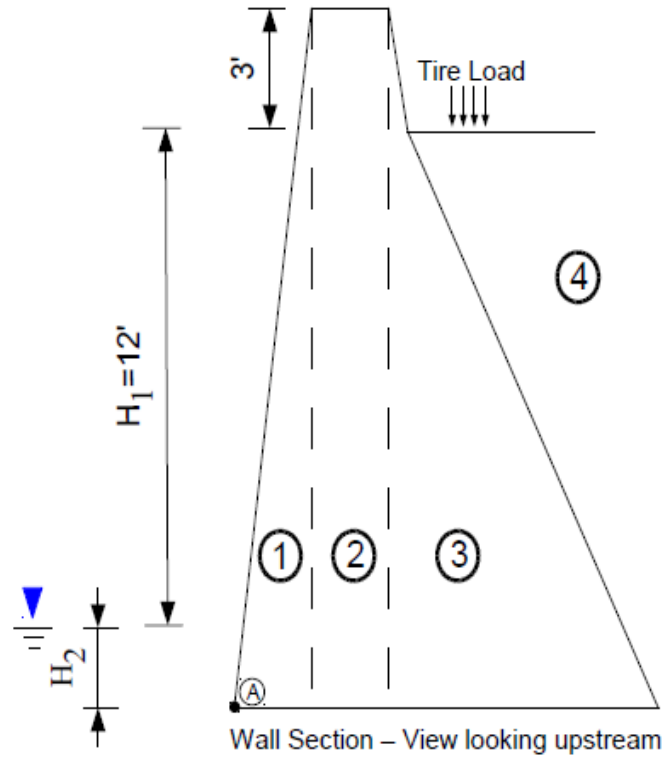

Figure 2: Wall Cross-Section

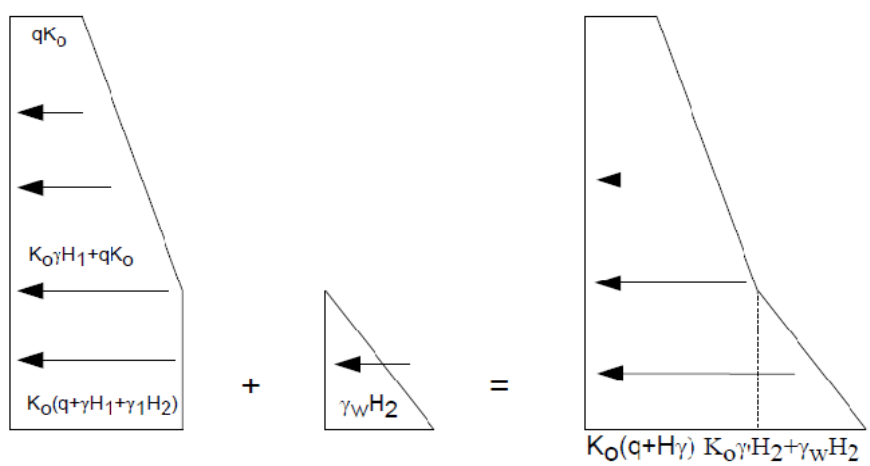

Figure 3: Pressure Diagram

References and Notes

See Figure 4 for diagram.

Driving Moment Arm Determination

Table 2: Driving Moment Arms and Loads (lbs and ft)

Section	Unfactored Loads (lb)	Factored Loads (lb)
1	$P_1 := K_o \cdot q \cdot H = 1.142 \times 10^4$	$P_{1af} := F_3 \cdot K_a \cdot q \cdot H = 1.360 \times 10^4$
2	$P_2 := \frac{1}{2} \cdot K_o \cdot \gamma_{unsat} \cdot H_1^2 = 4.584 \times 10^3$	$P_{2af} := \frac{1}{2} \cdot F_5 \cdot K_a \cdot \gamma_{unsat} \cdot H_1^2 = 4.679 \times 10^3$
3	$P_3 := K_o \cdot \gamma_{unsat} \cdot H_1 \cdot H_2 = 1.528 \times 10^3$	$P_{3af} := F_5 \cdot K_a \cdot \gamma_{unsat} \cdot H_1 \cdot H_2 = 1.560 \times 10^3$
4	$P_4 := \frac{1}{2} \cdot (K_o \gamma'_{sat} + \gamma_w) \cdot H_2^2 = 2.712 \times 10^2$	$P_{4af} := \frac{1}{2} \cdot F_5 \cdot (K_a \gamma'_{sat} + \gamma_w) \cdot H_2^2 = 3.367 \times 10^2$
5	$P_5 := \frac{1}{2} \cdot (\gamma_w \cdot H_2) = 6.240 \times 10^1$	$P_{5af} := \frac{1}{2} \cdot F_5 \cdot (\gamma_w \cdot H_2) = 9.360 \times 10^1$
μw	$P_6 := \frac{1}{2} \cdot (\gamma_w \cdot H_2) = 6.240 \times 10^1$	$P_{6af} := \frac{1}{2} \cdot F_5 \cdot (\gamma_w \cdot H_2) = 9.360 \times 10^1$
Sum	$V_D := P_1 + P_2 + P_3 + P_4 + P_5 + P_6 = 1.793 \times 10^4$	$V_{Df} := P_{1af} + P_{2af} + P_{3af} + P_{4af} + P_{5af} + P_{6af} = 2.037 \times 10^4$

Uplift pressure – Figure 5

Around point A, See Figure 1.

Section	Arm (ft)	Unfactored Moments (lb-ft)	Factored Moments (lb-ft)
1	$y_1 := 7.0$	$M_{D1} := y_1 \cdot P_1 = 7.996 \times 10^4$	$M_{D1f} := y_1 \cdot P_{1af} = 9.523 \times 10^4$
2	$y_2 := 6.0$	$M_{D2} := y_2 \cdot P_2 = 2.750 \times 10^4$	$M_{D2f} := y_2 \cdot P_{2af} = 2.807 \times 10^4$
3	$y_3 := 1.0$	$M_{D3} := y_3 \cdot P_3 = 1.528 \times 10^3$	$M_{D3f} := y_3 \cdot P_{3af} = 1.560 \times 10^3$
4	$y_4 := 0.67$	$M_{D4} := y_4 \cdot P_4 = 1.817 \times 10^2$	$M_{D4f} := y_4 \cdot P_{4af} = 2.256 \times 10^2$
5	$y_5 := 0.67$	$M_{D5} := y_5 \cdot P_5 = 4.181 \times 10^1$	$M_{D5f} := y_5 \cdot P_{5af} = 6.271 \times 10^1$
μw	$y_6 := 7.33$	$M_{D6} := y_6 \cdot P_6 = 4.574 \times 10^2$	$M_{D6f} := y_6 \cdot P_{6af} = 6.861 \times 10^2$
Sum		$M_D := M_{D1} + M_{D2} + M_{D3} + M_{D4} + M_{D5} + M_{D6} = 1.097 \times 10^5$	$M_{Df} := M_{D1f} + M_{D2f} + M_{D3f} + M_{D4f} + M_{D5f} + M_{D6f} = 1.258 \times 10^5$

Resulting moment arm for soil loading (overturning) (ft):

$$y := \frac{(M_{D1} + M_{D2} + M_{D3} + M_{D4} + M_{D5})}{P_o} = 6.134 \times 10^0$$

References and Notes

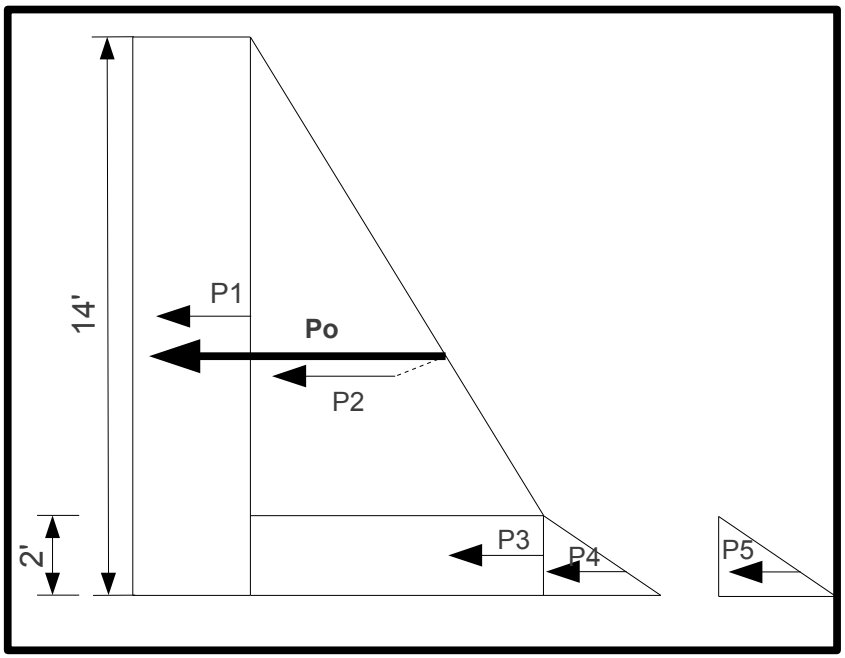

Figure 4: Lateral Forces and Resultant Force

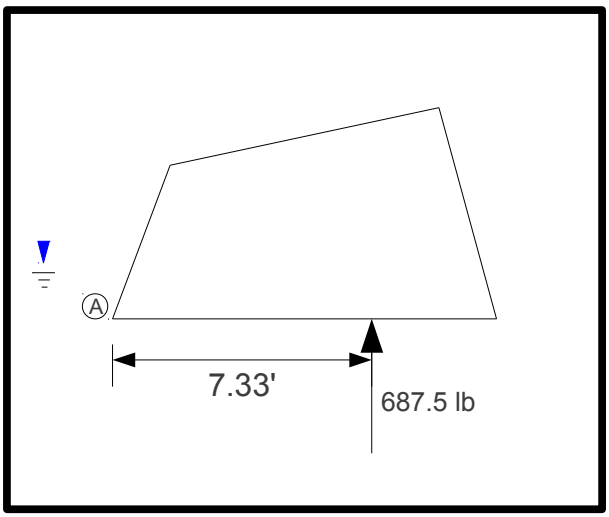

Figure 5: Uplift Pressure Diagram

References and Notes

Resisting Loads

Section	Unfactored Load (lb)	Factored Load (lb)
1	$w_{c1}:=3825$	$w_{c1f}:=F_1 \cdot w_{c1}=3.443\times10^3$
2	$w_{c2}:=5100$	$w_{c2f}:=F_1 \cdot w_{c2}=4.590\times10^3$
3	$w_{c3}:=7012.5$	$w_{c3f}:=F_1 \cdot w_{c3}=6.311\times10^3$
4	$w_{c4}:=4200$	$w_{c4f}:=F_1 \cdot w_{c4}=3.780\times10^3$
Vq	$w_{vq}:=8459$	$w_{vqf}:=F_1 \cdot w_{vq}=7.613\times10^3$
Sum	$V_{ru}:=w_{c1}+w_{c2}+w_{c3}+w_{c4}+w_{vq}$ $V_{ru}=2.860\times10^4$	$V_{ruf}:=w_{c1f}+w_{c2f}+w_{c3f}+w_{c4f}+w_{vqf}$ $V_{ruf}=2.574\times10^4$

Resisting Moments

Around point A, see Figure 1.

Section	Arm (ft)	Unfactored Moment (lb -ft)	Factored Moment (lb-ft)
1	$y_{c1}:=2$	$M_{R1}:=w_{c1} \cdot y_{c1}=7.650\times10^3$	$M_{R1f}:=w_{c1f} * y_{c1}=6.885\times10^3$
2	$y_{c2}:=4$	$M_{R2}:=w_{c2} \cdot y_{c2}=2.040\times10^4$	$M_{R2f}:=w_{c2f} \cdot y_{c2}=1.836\times10^4$
3	$y_{c3}:=9.2$	$M_{R3}:=w_{c3} \cdot y_{c3}=6.452\times10^4$	$M_{R3f}:=w_{c3f} \cdot y_{c3}=5.806\times10^4$
4	$y_{c4}:=9.33$	$M_{R4}:=w_{c4} \cdot y_{c4}=3.919\times10^4$	$M_{R4f}:=w_{c4f} \cdot y_{c4}=3.527\times10^4$
Vq	$y_{vq}:=9.33$	$M_{Rvq}:=w_{vq} \cdot y_{vq}=7.892\times10^4$	$M_{Rvqf}:=w_{vqf} \cdot y_{vq}=7.103\times10^4$
Sum		$M_R:=M_{R1}+M_{R2}+M_{R3}$ $+M_{R4}+M_{Rvq}$ $M_R=2.107\times10^5$	$M_{Rf}:=M_{R1f}+M_{R2f}+M_{R3f}$ $+M_{R4f}+M_{Rvq}$ $M_{Rf}=1.975\times10^5$

Bearing Capacity (Concrete to Rock)

$$M_{net}:=M_R-M_D=1.010\times10^5$$

$$ae:=\frac{M_{net}}{V_{ru}}=3.532\times10^0$$

$$RR:=\frac{ae}{B}=3.211\times10^{-1}$$

Eccentricity:

$$e:=\frac{B}{2}-ae=1.968\times10^0$$

$$\frac{B}{6}=1.833\times10^0 \qquad e>\frac{B}{6}=true$$

Resultant in middle 3rd of base (true).

Effective base pressures:

References and Notes

$$q_{toe} := \frac{V_{ru}}{B} \cdot \left[1 + \frac{(6 \cdot e)}{B}\right] = 5.391 \times 10^3$$

$$q_{heel} := \frac{V_{ru}}{B} \cdot \left[1 - \frac{(6 \cdot e)}{B}\right] = -1.912 \times 10^2$$

Ref 5. eq. 4-6

Percentage of base in compression: $B_c := 0.9$

Sliding Analysis Parameters

Effective Cohesion length (ft): $L' := B \cdot B_c = 9.900 \times 10^0$

Bearing Capacity Parameters

IBC 2006, pg 346, Table 1804.2

Allowable Foundation Pressure(psf): $S := 12000$

Unfactored Bearing Pressure (psf): $B_p := \frac{V_{ru}}{L'} = 2.889 \times 10^3$

Factored Bearing Pressure (psf): $B_{pf} := \frac{V_{ru} \cdot F_2}{L'} = 2.889 \times 10^3$

Calculated Factors of Safety (FoS)

Feature	ASD Unfactored	LRFD Factored
Overturning	$FS_o := \frac{M_R}{M_D} = 1.921 \times 10^0$	$RF_o := \frac{M_{Df}}{M_{Rf}} = 6.372 \times 10^{-1}$
Sliding	$FS_s := \frac{(V_{ru} \cdot \tan(\Phi'') + c \cdot L')}{P_o}$ $FS_s = 2.144 \times 10^0$	$RF_s := \frac{P_{af}}{(V_{ruf} \cdot \tan(\Phi'') + c \cdot L')}$ $RF_s = 5.639 \times 10^{-1}$
Bearing	$FS_B := \frac{S}{B_p} = 4.154 \times 10^0$	$RF_B := \frac{B_{pf}}{S} = 2.407 \times 10^{-1}$

Allowable FoS Analysis

Allowable for ASD – Ref 5.
Allowable for LRFD – Ref 7.

	ASD		LRFD	
Feature	Allowable	Check	Allowable	Check
Overturning	$B_{ca} := 0.75$	$B_c > B_{ca} = true$	N/A	N/A
Sliding	$FS_{sa} := 1.5$	$FS_s > FS_{sa} = true$	$RF_{sa} := 0.8$	$RF_{sa} > RF_o = true$
Bearing	$FS_{Ba} := 3.0$	$FS_B > FS_{Ba} = true$	$RF_{Ba} := 0.65$	$RF_{Ba} > RF_B = true$

Appendix B:

Fish Passage Requirements

Fish Passage Requirements

Pequabuck River - Connecticut

Common Name	American shad		Alewife		Blueback herring		Sea lamprey		American eel		White perch	
(Scientific Name)	*(Alosa sapidissima)*		*(Alosa pseudoharengus)*		*(Alosa aestivalis)*		*(Petromyzon marinus)*		*(Anguilla rostrata)*		*(Morone americana)*	
Life Stage of Concern	juvenile	adult	juvenile	adult	juvenile	adult	juvenile	adult	elver	adult	juvenile	adult
Life Cycle Classification	anadromous		anadromous		anadromous		anadromous		catadromous		anadromous	
											(fresh & salt-water)	
Average Size (length in inches)	3 - 6	20	2 - 4	12	3 - 6	12	6	34	3	30		14
Upstream Migration Period												
Start		April 1		April 1		April 1		May	Spring			May
Peak								June	May			June
End		July 15		June		July 15		July				July
Associated Temperature (^{o}C)												
Start	5 - 6		4 - 5		5 - 6		13					
Peak	15		8								18 - 20	
End	22				22+		22					
Downstream Migration Period												
Start	September 15	June	June	May	September 15	June	November			Fall		
Peak												
End	November 15	July 30	August	July 30	November 15	July 30	April					
Associated Temperature (^{o}C)												
Start	21											
Peak												
End	8 - 10											
Required Water Depth (inches)[1]	>= 6	7 - 9	>= 6	5	>= 6	5	>= 6	>=4	>= 6	>= 6		10 - 12
Relative Swimming Depth in Water Column	upper 1/3	deepest 1/3				mid-depth	bottom	bottom		bottom		
Swimming Speed (ft/s)												
-crusing speed		2.8		2.8		2.8		1.2		2.4		
-sustained speed		7.6		4.8		4.8		2.8				
-burst speed	5	14.8	3.2	6.8	3.2	6.8	2	7.2	0.3	6 - 7		9
Swimming Characteristics	schooling	solitary - school at barriers	schooling	schooling	schooling	schooling		anguilliform, solitary		anguilliform, solitary	schooling	schooling
Behavior Relating to Passage	velocity >11 ft/s for > 5 ft results in reduced passage		diurnal		diurnal			attach & rest/swim	adults avoid strobe light			

notes:

[1]Based on a minimum of one body depth; although taken together with gradient and water velocity, 10 - 15 inches minimum was found practical in most rapids of James River.

sources:

B. Kynard. 1993. Fish Behavior Important for Fish Passage. Proc. Fish Passage and Technology Symposium

C. Katapodis. 1992. Introduction to Fishway Design, working document.

E.A. Engineering, Science, and Technology. 1991. James River Instream Flow Study: Fish Passage Evaluations. Unpublished technical report.

G. Kissil. 1974. Spawning of Anadromous Alewives, *Alosa pseudoharengus* , in Bride Lake, CT. TAFS 103

K. Loftus. 1982. Proc. Of the 1980 North American Eel Conference. Ontario Fish Tech. Report No. 4

J. Holsapple and L. Foster. 1975. Reproduction of White Perch in the Lower Hudson River. NY Fish and Game

G. Barbin and W. Krueger. 1994. Behavior and Swimming Performance of Elvers of American Eel, *Anguilla rostrata* , in an experimental flume, Journal of Fish Biology 45: 111 - 121

W. Whitworth.1996. Freshwater Fishes of Connecticut, Second Edition.

Species Profiles: American Eel. USFWS Biol. Report 82 (11.74). August 1987.

Fish Passageways and Diversion Structures; U.S. Fish & Wildlife Service

This chart has been modified from a Milone & MacBroom, Inc. chart for the Naugtuck River, originally compiled by Laura Wildman

Appendix C:

Hydrology Data

USGS Connecticut Streamstats

Basin Characteristics Report

Date: Wed Mar 10 2010 13:35:41 Mountain Standard Time
NAD83 Latitude: 41.6687 (41 40 07)
NAD83 Longitude: -72.9230 (-72 55 22)
NAD27 Latitude: 41.6686 (41 40 07)
NAD27 Longitude: -72.9235 (-72 55 24)

Parameter	Value
24-hour, 2-year precip	3.5
24-hour, 25-year precip	6.3
24-hour, 10-year precip	5.1
Area in square miles	25.3
24-hour, 100-year precip	8.8
Average elevation in feet	725.58
24-hour, 50-year precip	7.5

USGS Connecticut Streamstats

Streamstats Ungaged Site Report

Date: Wed Mar 10 2010 13:37:24 Mountain Standard Time
Site Location: Connecticut
NAD83 Latitude: 41.6687 (41 40 07)
NAD83 Longitude: -72.9230 (-72 55 22)
NAD27 Latitude: 41.6686 (41 40 07)
NAD27 Longitude: -72.9235 (-72 55 24)
Drainage Area: 25.3 mi2

Peak Flows Region Grid Basin Characteristics			
100% Statewide Multiparameter (25.3 mi2)			
Parameter	Value	Regression Equation Valid Range	
		Min	Max
Drainage Area (square miles)	25.3	1.69	715
24 Hour 2 Year Precipitation (inches)	3.5	2.95	3.82
24 Hour 10 Year Precipitation (inches)	5.1	4.15	5.53
24 Hour 25 Year Precipitation (inches)	6.3	4.93	7
24 Hour 50 Year Precipitation (inches)	7.5	5.62	8.36
24 Hour 100 Year Precipitation (inches)	8.8	6.41	9.99
Mean Basin Elevation (feet)	725.58	169	1310

Peak Flows Region Grid Streamflow Statistics					
Statistic	Flow (ft^3/s)	Prediction Error (percent)	Equivalent years of record	90-Percent Prediction Interval	
				Minimum	Maximum
PK2	889	32	3.5		
PK10	1990	33	8.1		
PK25	2640	34	11		
PK50	3280	36	13		
PK100	3880	38	14		
PK500	5270	45	15		

Appendix D:

Hydraulic Modeling Data

Middle Street Dam Removal - Final Plan: 1) ExCondMultiQ 2/13/2013 3:58:41 PM 2) Proposed Con 2/13/2013 3:58:41 PM

Geom: Existing Geometry Flow: Multiple Discharges

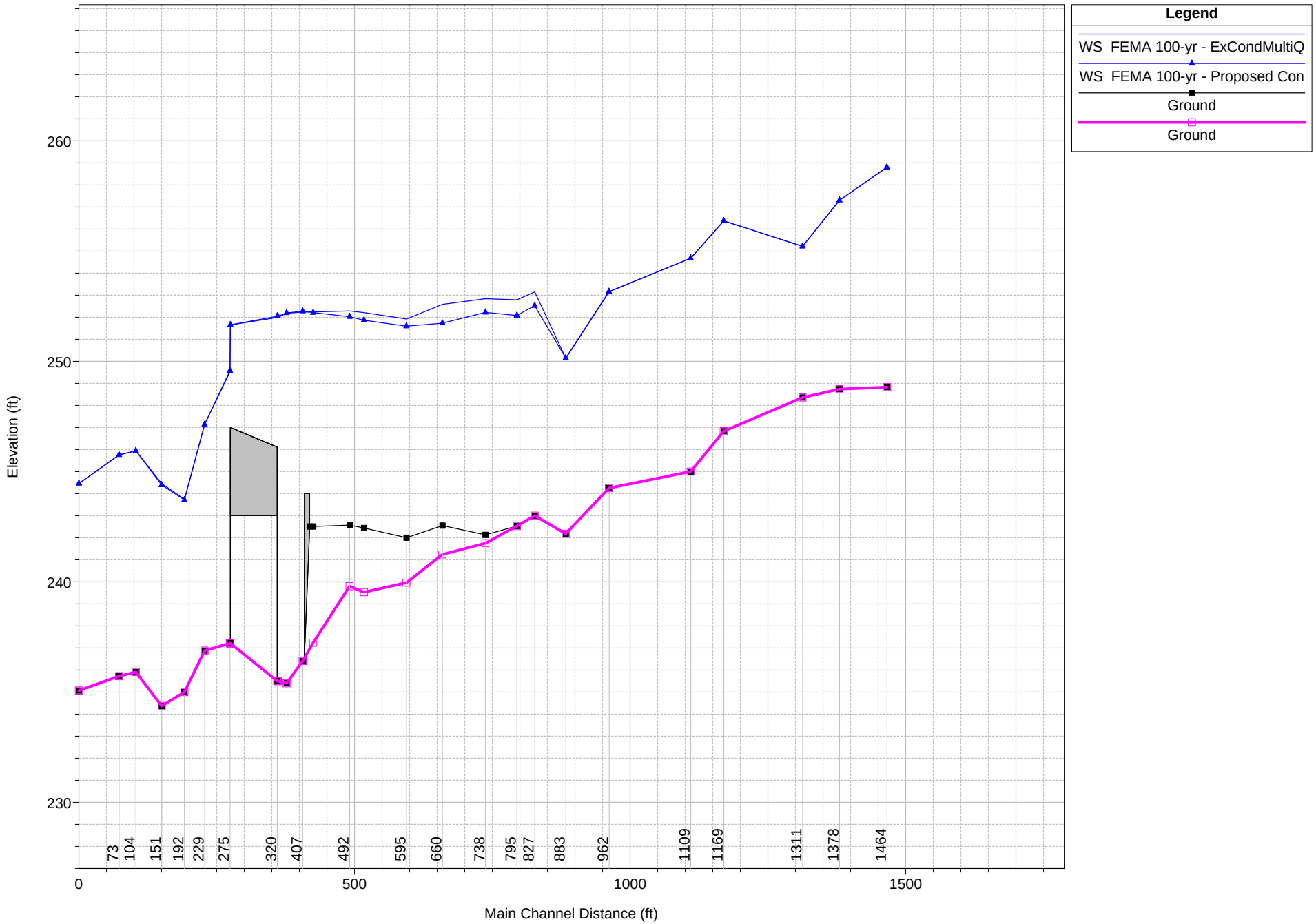

1 in Horiz. = 240 ft 1 in Vert. = 6 ft

Middle Street Dam Removal - Final Plan: 1) ExCondMultiQ 2/13/2013 3:58:41 PM 2) Proposed Con 2/13/2013 3:58:41 PM

Geom: Existing Geometry Flow: Multiple Discharges

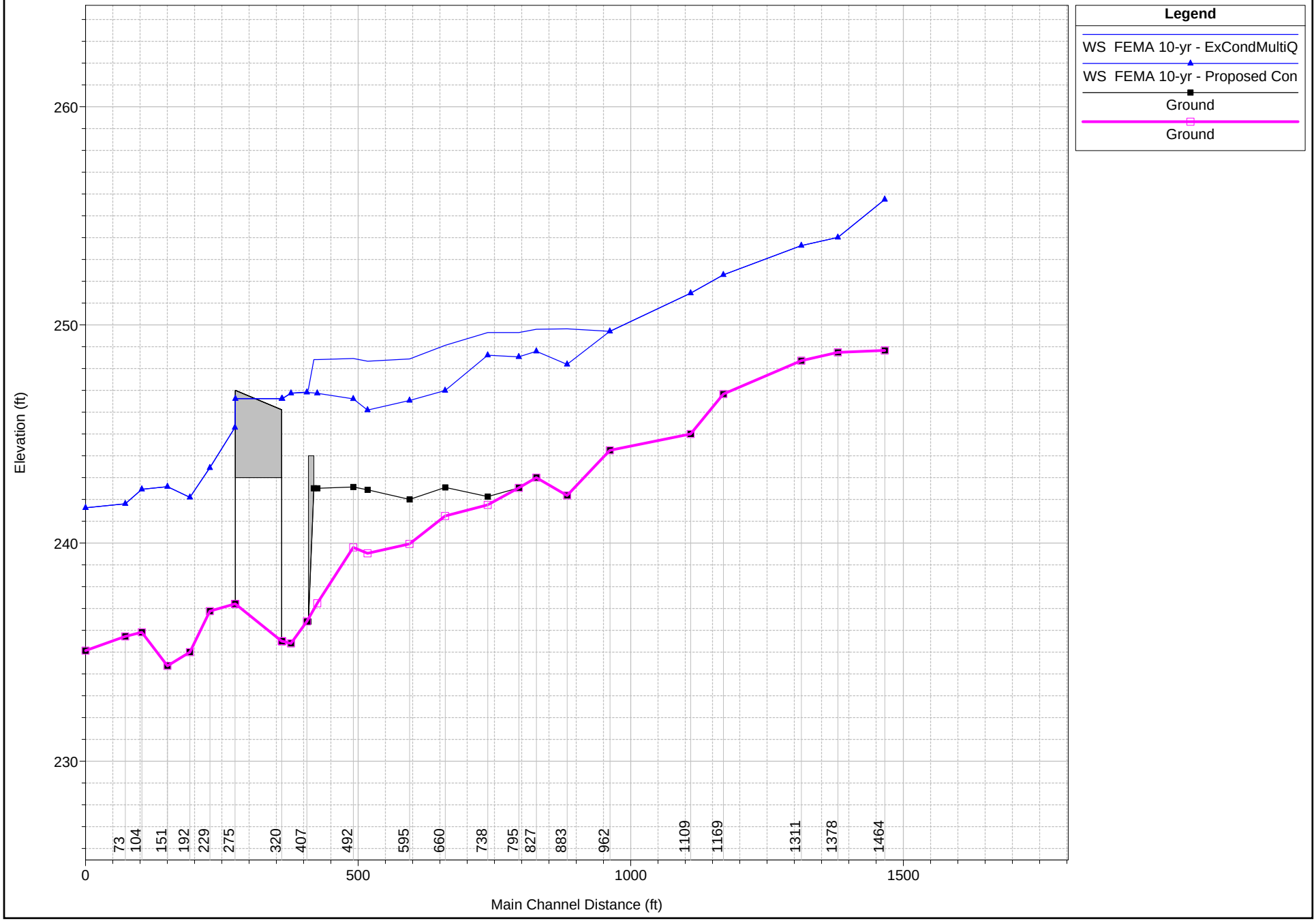

1 in Horiz. = 240 ft 1 in Vert. = 6 ft

Middle Street Dam Removal - Final Plan: 1) ExCondMultiQ 2/13/2013 3:58:41 PM 2) Proposed Con 2/13/2013 3:58:41 PM

Geom: Existing Geometry Flow: Multiple Discharges

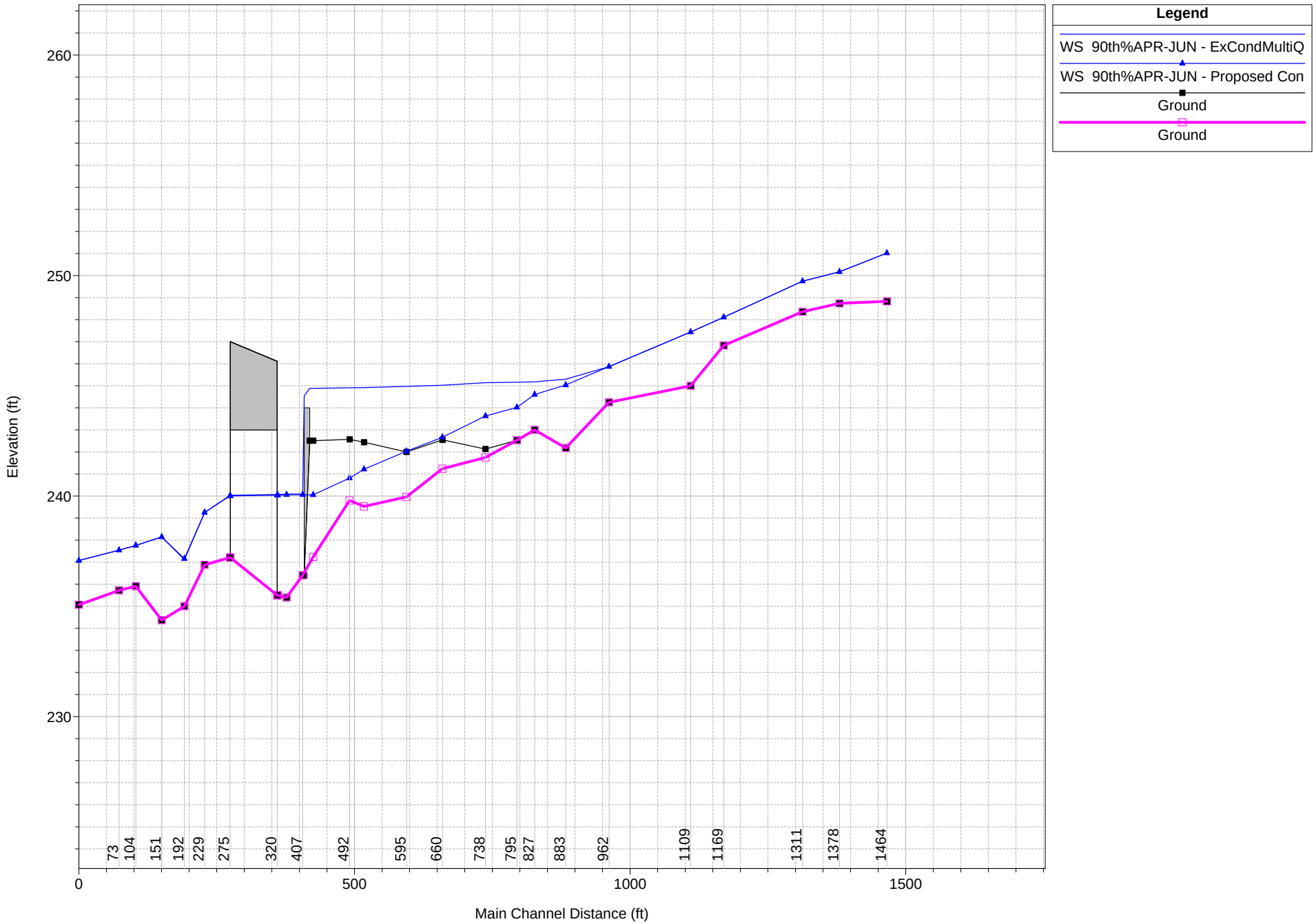

1 in Horiz. = 240 ft 1 in Vert. = 6 ft

HEC-RAS River: Pequabuck Reach: Main

Reach	River Sta	Profile	Plan	Q Total	Min Ch El	W.S. Elev	Crit W.S.	E.G. Elev	E.G. Slope	Vel Chnl	Flow Area	Top Width	Froude # Chl
				(cfs)	(ft)	(ft)	(ft)	(ft)	(ft/ft)	(ft/s)	(sq ft)	(ft)	
Main	1464	90th%APR-JUN	ExCondMultiQ	175.00	248.83	251.02	250.45	251.18	0.003795	3.26	54.70	45.12	0.49
Main	1464	90th%APR-JUN	Proposed Con	175.00	248.83	251.02	250.45	251.18	0.003796	3.26	54.69	45.12	0.49
Main	1464	FEMA 10-yr	ExCondMultiQ	2328.00	248.83	255.75	254.03	256.55	0.002947	7.68	337.78	66.62	0.55
Main	1464	FEMA 10-yr	Proposed Con	2328.00	248.83	255.75	254.03	256.55	0.002948	7.68	337.75	66.62	0.55
Main	1464	FEMA 100-yr	ExCondMultiQ	5547.00	248.83	258.80	256.87	260.44	0.003653	11.20	574.35	115.80	0.65
Main	1464	FEMA 100-yr	Proposed Con	5547.00	248.83	258.80	256.87	260.44	0.003654	11.20	574.27	115.76	0.65
Main	1378	90th%APR-JUN	ExCondMultiQ	175.00	248.74	250.17	250.13	250.57	0.016495	5.06	34.62	38.64	0.94
Main	1378	90th%APR-JUN	Proposed Con	175.00	248.74	250.17	250.13	250.57	0.016522	5.06	34.60	38.64	0.94
Main	1378	FEMA 10-yr	ExCondMultiQ	2328.00	248.74	254.01	254.01	256.00	0.011111	11.36	207.79	54.84	0.99
Main	1378	FEMA 10-yr	Proposed Con	2328.00	248.74	254.01	254.01	256.00	0.011111	11.36	207.79	54.84	0.99
Main	1378	FEMA 100-yr	ExCondMultiQ	5547.00	248.74	257.31	257.31	259.93	0.007578	13.44	450.63	86.03	0.89
Main	1378	FEMA 100-yr	Proposed Con	5547.00	248.74	257.31	257.31	259.93	0.007578	13.44	450.63	86.03	0.89
Main	1311	90th%APR-JUN	ExCondMultiQ	175.00	248.36	249.74		249.92	0.005361	3.32	52.85	48.14	0.56
Main	1311	90th%APR-JUN	Proposed Con	175.00	248.36	249.74		249.92	0.005361	3.32	52.85	48.14	0.56
Main	1311	FEMA 10-yr	ExCondMultiQ	2328.00	248.36	253.64	252.86	255.00	0.005849	9.48	258.67	64.88	0.75
Main	1311	FEMA 10-yr	Proposed Con	2328.00	248.36	253.64	252.86	255.00	0.005849	9.48	258.67	64.88	0.75
Main	1311	FEMA 100-yr	ExCondMultiQ	5547.00	248.36	255.22	256.02	259.16	0.012148	16.41	368.74	73.43	1.13
Main	1311	FEMA 100-yr	Proposed Con	5547.00	248.36	255.21	256.02	259.16	0.012153	16.41	368.68	73.43	1.13
Main	1169	90th%APR-JUN	ExCondMultiQ	175.00	246.83	248.11	248.11	248.58	0.018781	5.50	31.90	34.97	1.01
Main	1169	90th%APR-JUN	Proposed Con	175.00	246.83	248.11	248.11	248.58	0.018781	5.50	31.90	34.97	1.01
Main	1169	FEMA 10-yr	ExCondMultiQ	2328.00	246.83	252.29	252.29	254.01	0.007827	10.92	239.68	75.01	0.86
Main	1169	FEMA 10-yr	Proposed Con	2328.00	246.83	252.29	252.29	254.01	0.007827	10.92	239.68	75.01	0.86
Main	1169	FEMA 100-yr	ExCondMultiQ	5547.00	246.83	256.37	255.13	258.04	0.003922	11.52	594.58	105.29	0.68
Main	1169	FEMA 100-yr	Proposed Con	5547.00	246.83	256.37	255.13	258.04	0.003922	11.52	594.58	105.29	0.68
Main	1109	90th%APR-JUN	ExCondMultiQ	175.00	245.00	247.44	246.92	247.67	0.004853	3.88	45.61	31.78	0.55
Main	1109	90th%APR-JUN	Proposed Con	175.00	245.00	247.44	246.92	247.67	0.004863	3.88	45.58	31.78	0.56
Main	1109	FEMA 10-yr	ExCondMultiQ	2328.00	245.00	251.45	251.57	253.47	0.008456	12.12	223.04	61.48	0.91
Main	1109	FEMA 10-yr	Proposed Con	2328.00	245.00	251.45	251.57	253.47	0.008458	12.12	223.02	61.48	0.91
Main	1109	FEMA 100-yr	ExCondMultiQ	5547.00	245.00	254.68	254.67	257.58	0.007222	15.21	438.52	72.29	0.91
Main	1109	FEMA 100-yr	Proposed Con	5547.00	245.00	254.68	254.67	257.58	0.007222	15.21	438.52	72.29	0.91
Main	962	90th%APR-JUN	ExCondMultiQ	175.00	244.25	245.87	245.87	246.39	0.018236	5.82	30.08	29.17	1.01
Main	962	90th%APR-JUN	Proposed Con	175.00	244.25	245.87	245.87	246.39	0.018225	5.82	30.08	29.17	1.01
Main	962	FEMA 10-yr	ExCondMultiQ	2328.00	244.25	249.70	249.93	251.98	0.012459	12.20	196.09	52.67	1.05
Main	962	FEMA 10-yr	Proposed Con	2328.00	244.25	249.70	249.93	251.98	0.012440	12.19	196.19	52.68	1.05
Main	962	FEMA 100-yr	ExCondMultiQ	5547.00	244.25	253.16	253.16	256.45	0.008443	14.99	400.07	65.57	0.96
Main	962	FEMA 100-yr	Proposed Con	5547.00	244.25	253.17	253.17	256.45	0.008414	14.98	400.56	65.62	0.95
Main	883	90th%APR-JUN	ExCondMultiQ	175.00	242.18	245.30	244.42	245.48	0.003556	3.40	51.46	32.09	0.47
Main	883	90th%APR-JUN	Proposed Con	175.00	242.18	245.03	244.42	245.29	0.005406	4.03	43.37	28.67	0.58
Main	883	FEMA 10-yr	ExCondMultiQ	2328.00	242.18	249.82	248.80	250.85	0.005484	8.17	285.84	67.77	0.69
Main	883	FEMA 10-yr	Proposed Con	2328.00	242.18	248.19	248.80	250.72	0.020456	12.78	182.14	57.81	1.27
Main	883	FEMA 100-yr	ExCondMultiQ	5547.00	242.18	250.14	251.55	255.22	0.024737	18.10	307.72	69.07	1.49
Main	883	FEMA 100-yr	Proposed Con	5547.00	242.18	250.15	251.56	255.24	0.023512	18.12	308.72	69.10	1.46
Main	827	90th%APR-JUN	ExCondMultiQ	175.00	243.00	245.18		245.30	0.002352	2.76	63.45	40.14	0.39
Main	827	90th%APR-JUN	Proposed Con	175.00	243.00	244.61		244.89	0.009425	4.28	40.92	38.36	0.73
Main	827	FEMA 10-yr	ExCondMultiQ	2328.00	243.00	249.80		250.54	0.003027	6.96	343.61	72.14	0.54
Main	827	FEMA 10-yr	Proposed Con	2328.00	243.00	248.79	248.06	249.94	0.006403	8.63	272.12	69.35	0.75
Main	827	FEMA 100-yr	ExCondMultiQ	5547.00	243.00	253.15	250.77	254.59	0.003106	9.80	596.92	78.96	0.59
Main	827	FEMA 100-yr	Proposed Con	5547.00	243.00	252.53	250.74	254.21	0.004023	10.52	548.14	77.81	0.66
Main	795	90th%APR-JUN	ExCondMultiQ	175.00	242.53	245.16		245.24	0.001072	2.18	81.24	43.00	0.27
Main	795	90th%APR-JUN	Proposed Con	175.00	242.53	244.02	244.02	244.45	0.019931	5.24	33.41	40.70	1.02
Main	795	FEMA 10-yr	ExCondMultiQ	2328.00	242.53	249.65		250.44	0.002602	7.50	342.50	66.38	0.52
Main	795	FEMA 10-yr	Proposed Con	2328.00	242.53	248.53		249.74	0.005774	8.90	269.80	63.81	0.72
Main	795	FEMA 100-yr	ExCondMultiQ	5547.00	242.53	252.79		254.45	0.003320	11.03	562.33	73.65	0.63
Main	795	FEMA 100-yr	Proposed Con	5547.00	242.53	252.08		254.03	0.004563	11.51	510.54	72.00	0.71
Main	738	90th%APR-JUN	ExCondMultiQ	175.00	242.13	245.14		245.18	0.000623	1.69	104.28	53.02	0.21
Main	738	90th%APR-JUN	Proposed Con	175.00	241.75	243.63	243.06	243.81	0.004616	3.38	51.78	40.53	0.53
Main	738	FEMA 10-yr	ExCondMultiQ	2328.00	242.13	249.65		250.26	0.001884	6.43	385.36	68.74	0.44
Main	738	FEMA 10-yr	Proposed Con	2328.00	241.75	248.61		249.39	0.002759	7.16	336.64	66.67	0.53
Main	738	FEMA 100-yr	ExCondMultiQ	5547.00	242.13	252.84		254.19	0.002548	9.74	621.99	88.40	0.55
Main	738	FEMA 100-yr	Proposed Con	5547.00	241.75	252.22		253.68	0.002800	9.97	591.20	79.00	0.57
Main	660	90th%APR-JUN	ExCondMultiQ	175.00	242.55	245.02		245.11	0.001397	2.35	74.48	39.94	0.30
Main	660	90th%APR-JUN	Proposed Con	175.00	241.24	242.66	242.66	243.13	0.019198	5.47	31.98	35.34	1.01
Main	660	FEMA 10-yr	ExCondMultiQ	2328.00	242.55	249.07		250.00	0.005238	7.77	301.14	73.96	0.67
Main	660	FEMA 10-yr	Proposed Con	2328.00	241.24	246.99	246.71	248.91	0.009515	11.15	211.34	48.66	0.90
Main	660	FEMA 100-yr	ExCondMultiQ	5547.00	242.55	252.59		253.95	0.003780	9.46	593.67	94.05	0.62
Main	660	FEMA 100-yr	Proposed Con	5547.00	241.24	251.73		253.41	0.003713	11.06	565.20	89.65	0.63
Main	595	90th%APR-JUN	ExCondMultiQ	175.00	242.00	244.97		245.03	0.000822	1.95	89.56	42.86	0.24
Main	595	90th%APR-JUN	Proposed Con	175.00	239.96	242.03	241.65	242.32	0.007213	4.32	40.51	30.50	0.66
Main	595	FEMA 10-yr	ExCondMultiQ	2328.00	242.00	248.44		249.64	0.004980	8.97	280.84	74.54	0.68
Main	595	FEMA 10-yr	Proposed Con	2328.00	239.96	246.54		248.28	0.008280	10.59	220.63	48.69	0.85
Main	595	FEMA 100-yr	ExCondMultiQ	5547.00	242.00	251.92		253.66	0.004044	11.27	561.60	97.42	0.67
Main	595	FEMA 100-yr	Proposed Con	5547.00	239.96	251.59		253.16	0.003154	10.58	590.49	87.77	0.60
Main	518	90th%APR-JUN	ExCondMultiQ	175.00	242.44	244.92		244.97	0.000778	1.83	95.78	49.16	0.23
Main	518	90th%APR-JUN	Proposed Con	175.00	239.53	241.21	241.05	241.62	0.011566	5.09	34.40	28.76	0.82
Main	518	FEMA 10-yr	ExCondMultiQ	2328.00	242.44	248.33		249.21	0.003840	7.76	325.52	85.94	0.60

HEC-RAS River: Pequabuck Reach: Main (Continued)

Reach	River Sta	Profile	Plan	Q Total	Min Ch El	W.S. Elev	Crit W.S.	E.G. Elev	E.G. Slope	Vel Chnl	Flow Area	Top Width	Froude # Chl
				(cfs)	(ft)	(ft)	(ft)	(ft)	(ft/ft)	(ft/s)	(sq ft)	(ft)	
Main	518	FEMA 10-yr	Proposed Con	2328.00	239.53	246.10	245.50	247.60	0.007488	9.88	238.94	59.65	0.82
Main	518	FEMA 100-yr	ExCondMultiQ	5547.00	242.44	252.21		253.23	0.002268	8.66	715.04	108.19	0.51
Main	518	FEMA 100-yr	Proposed Con	5547.00	239.53	251.87		252.80	0.001767	8.29	759.00	106.91	0.45
Main	492	90th%APR-JUN	ExCondMultiQ	175.00	242.57	244.91		244.95	0.000548	1.52	115.70	61.41	0.19
Main	492	90th%APR-JUN	Proposed Con	175.00	239.80	240.81	240.81	241.22	0.019658	5.15	34.01	42.00	1.01
Main	492	FEMA 10-yr	ExCondMultiQ	2328.00	242.57	248.46		249.05	0.002418	6.41	390.97	95.18	0.48
Main	492	FEMA 10-yr	Proposed Con	2328.00	239.80	246.61		247.24	0.002228	6.44	371.81	79.49	0.47
Main	492	FEMA 100-yr	ExCondMultiQ	5547.00	242.57	252.29		253.13	0.001740	7.75	775.45	105.63	0.45
Main	492	FEMA 100-yr	Proposed Con	5547.00	239.80	252.03		252.69	0.001058	6.83	888.93	104.92	0.36
Main	426	90th%APR-JUN	ExCondMultiQ	175.00	242.51	244.88	243.66	244.91	0.000452	1.30	134.93	77.74	0.17
Main	426	90th%APR-JUN	Proposed Con	175.00	237.24	240.06	238.21	240.07	0.000217	1.09	160.47	67.99	0.13
Main	426	FEMA 10-yr	ExCondMultiQ	2328.00	242.51	248.41	246.18	248.88	0.001897	5.56	439.25	99.56	0.43
Main	426	FEMA 10-yr	Proposed Con	2328.00	237.24	246.86		247.06	0.000424	3.59	663.96	87.20	0.21
Main	426	FEMA 100-yr	ExCondMultiQ	5547.00	242.51	252.24	248.65	253.00	0.001542	7.22	833.69	107.29	0.42
Main	426	FEMA 100-yr	Proposed Con	5547.00	237.24	252.21		252.55	0.000401	4.76	1200.92	107.22	0.22
Main	420			Inl Struct									
Main	407	90th%APR-JUN	ExCondMultiQ	175.00	236.40	240.09		240.10	0.000043	0.63	278.46	80.89	0.06
Main	407	90th%APR-JUN	Proposed Con	175.00	236.41	240.06		240.07	0.000046	0.63	275.73	80.89	0.06
Main	407	FEMA 10-yr	ExCondMultiQ	2328.00	236.40	246.92		247.04	0.000198	2.80	842.08	97.11	0.15
Main	407	FEMA 10-yr	Proposed Con	2328.00	236.41	246.91		247.03	0.000225	2.79	841.17	97.05	0.15
Main	407	FEMA 100-yr	ExCondMultiQ	5547.00	236.40	252.23		252.50	0.000258	4.23	1438.82	118.25	0.19
Main	407	FEMA 100-yr	Proposed Con	5547.00	236.41	252.28		252.51	0.000262	3.94	1443.84	118.32	0.18
Main	378	90th%APR-JUN	ExCondMultiQ	175.00	235.40	240.09		240.10	0.000038	0.67	262.57	66.12	0.06
Main	378	90th%APR-JUN	Proposed Con	175.00	235.40	240.06		240.07	0.000040	0.67	260.63	66.08	0.06
Main	378	FEMA 10-yr	ExCondMultiQ	2328.00	235.40	246.87		247.03	0.000236	3.20	745.86	81.77	0.17
Main	378	FEMA 10-yr	Proposed Con	2328.00	235.40	246.86		247.02	0.000240	3.17	745.19	81.71	0.17
Main	378	FEMA 100-yr	ExCondMultiQ	5547.00	235.40	252.18		252.49	0.000273	4.48	1313.99	125.76	0.20
Main	378	FEMA 100-yr	Proposed Con	5547.00	235.40	252.20		252.50	0.000275	4.43	1315.66	125.98	0.19
Main	361	90th%APR-JUN	ExCondMultiQ	175.00	235.50	240.07	237.13	240.09	0.000173	1.23	142.71	49.88	0.13
Main	361	90th%APR-JUN	Proposed Con	175.00	235.50	240.04	237.13	240.06	0.000221	1.24	141.21	49.88	0.13
Main	361	FEMA 10-yr	ExCondMultiQ	2328.00	235.50	246.62	241.28	247.01	0.000650	4.92	474.91	58.14	0.28
Main	361	FEMA 10-yr	Proposed Con	2328.00	235.50	246.61	241.28	247.00	0.000769	4.93	474.29	58.08	0.28
Main	361	FEMA 100-yr	ExCondMultiQ	5547.00	235.50	251.99	244.47	252.47	0.000470	5.62	1058.91	141.28	0.26
Main	361	FEMA 100-yr	Proposed Con	5547.00	235.50	252.05	244.46	252.48	0.000482	5.26	1066.99	142.18	0.24
Main	320			Bridge									
Main	275	90th%APR-JUN	ExCondMultiQ	175.00	237.21	240.04		240.07	0.000356	1.42	123.59	50.61	0.16
Main	275	90th%APR-JUN	Proposed Con	175.00	237.21	240.01		240.04	0.000371	1.43	122.00	50.60	0.16
Main	275	FEMA 10-yr	ExCondMultiQ	2328.00	237.21	245.30		245.84	0.001532	5.87	396.35	53.01	0.38
Main	275	FEMA 10-yr	Proposed Con	2328.00	237.21	245.29		245.83	0.001538	5.88	395.84	53.00	0.38
Main	275	FEMA 100-yr	ExCondMultiQ	5547.00	237.21	249.53		250.64	0.001937	8.58	690.72	103.35	0.45
Main	275	FEMA 100-yr	Proposed Con	5547.00	237.21	249.57		250.67	0.001904	8.53	695.71	104.15	0.44
Main	229	90th%APR-JUN	ExCondMultiQ	175.00	236.88	239.25	239.25	239.95	0.016188	6.77	26.58	20.15	0.96
Main	229	90th%APR-JUN	Proposed Con	175.00	236.88	239.25	239.25	239.92	0.018996	6.56	26.69	20.18	1.00
Main	229	FEMA 10-yr	ExCondMultiQ	2328.00	236.88	243.47	243.47	245.53	0.012750	12.85	208.78	48.21	0.98
Main	229	FEMA 10-yr	Proposed Con	2328.00	236.88	243.44	243.44	245.52	0.012972	12.55	207.54	48.19	0.98
Main	229	FEMA 100-yr	ExCondMultiQ	5547.00	236.88	247.16	247.16	250.26	0.010966	15.37	397.33	64.59	0.94
Main	229	FEMA 100-yr	Proposed Con	5547.00	236.88	247.13	247.13	250.29	0.010996	15.38	395.65	64.53	0.95
Main	192	90th%APR-JUN	ExCondMultiQ	175.00	235.00	237.11	237.67	238.85	0.054740	10.56	16.57	13.25	1.66
Main	192	90th%APR-JUN	Proposed Con	175.00	235.00	237.16	237.67	238.76	0.049373	10.16	17.23	13.51	1.59
Main	192	FEMA 10-yr	ExCondMultiQ	2328.00	235.00	242.10	242.95	244.79	0.017948	14.91	199.53	66.04	1.12
Main	192	FEMA 10-yr	Proposed Con	2328.00	235.00	242.09	242.95	244.79	0.017961	14.91	199.47	66.02	1.12
Main	192	FEMA 100-yr	ExCondMultiQ	5547.00	235.00	243.74	245.37	249.22	0.030035	22.07	322.45	80.19	1.47
Main	192	FEMA 100-yr	Proposed Con	5547.00	235.00	243.71	245.37	249.27	0.030576	22.21	320.47	80.11	1.48
Main	151	90th%APR-JUN	ExCondMultiQ	175.00	234.37	238.15	236.67	238.28	0.001686	2.94	59.59	26.06	0.34
Main	151	90th%APR-JUN	Proposed Con	175.00	234.37	238.15	236.67	238.28	0.001686	2.94	59.59	26.06	0.34
Main	151	FEMA 10-yr	ExCondMultiQ	2328.00	234.37	242.58	242.58	244.24	0.005973	11.20	268.50	79.85	0.76
Main	151	FEMA 10-yr	Proposed Con	2328.00	234.37	242.58	242.58	244.24	0.005973	11.20	268.50	79.85	0.76
Main	151	FEMA 100-yr	ExCondMultiQ	5547.00	234.37	244.46	245.17	248.03	0.010379	17.37	422.00	83.16	1.04
Main	151	FEMA 100-yr	Proposed Con	5547.00	234.37	244.39	245.17	248.07	0.010769	17.60	416.41	83.11	1.06
Main	104	90th%APR-JUN	ExCondMultiQ	175.00	235.91	237.76		238.11	0.008990	4.71	37.16	29.14	0.73
Main	104	90th%APR-JUN	Proposed Con	175.00	235.91	237.76		238.11	0.008993	4.71	37.15	29.14	0.73
Main	104	FEMA 10-yr	ExCondMultiQ	2328.00	235.91	242.46	241.92	243.54	0.004512	9.28	331.08	99.04	0.67
Main	104	FEMA 10-yr	Proposed Con	2328.00	235.91	242.46	241.92	243.54	0.004511	9.28	331.10	99.04	0.67
Main	104	FEMA 100-yr	ExCondMultiQ	5547.00	235.91	245.94	244.46	247.01	0.002725	9.81	736.61	128.74	0.56
Main	104	FEMA 100-yr	Proposed Con	5547.00	235.91	245.94	244.46	247.01	0.002725	9.81	736.58	128.74	0.56
Main	73	90th%APR-JUN	ExCondMultiQ	175.00	235.72	237.54		237.85	0.006989	4.27	40.03	31.01	0.65
Main	73	90th%APR-JUN	Proposed Con	175.00	235.72	237.54		237.85	0.006994	4.27	40.01	31.00	0.65
Main	73	FEMA 10-yr	ExCondMultiQ	2328.00	235.72	241.80	241.78	243.32	0.005700	9.86	275.92	90.96	0.75
Main	73	FEMA 10-yr	Proposed Con	2328.00	235.72	241.80	241.78	243.32	0.005703	9.86	275.86	90.96	0.75
Main	73	FEMA 100-yr	ExCondMultiQ	5547.00	235.72	245.76		246.91	0.002403	9.23	727.67	134.59	0.53
Main	73	FEMA 100-yr	Proposed Con	5547.00	235.72	245.76		246.91	0.002404	9.23	727.64	134.59	0.53
Main	0	90th%APR-JUN	ExCondMultiQ	175.00	235.07	237.07	236.71	237.34	0.008304	3.75	42.83	32.15	0.61
Main	0	90th%APR-JUN	Proposed Con	175.00	235.07	237.07	236.71	237.34	0.008304	3.75	42.83	32.15	0.61

HEC-RAS River: Pequabuck Reach: Main (Continued)

Reach	River Sta	Profile	Plan	Q Total	Min Ch El	W.S. Elev	Crit W.S.	E.G. Elev	E.G. Slope	Vel Chnl	Flow Area	Top Width	Froude # Chl
				(cfs)	(ft)	(ft)	(ft)	(ft)	(ft/ft)	(ft/s)	(sq ft)	(ft)	
Main	0	FEMA 10-yr	ExCondMultiQ	2328.00	235.07	241.61	240.81	242.78	0.008302	9.08	269.47	62.66	0.74
Main	0	FEMA 10-yr	Proposed Con	2328.00	235.07	241.61	240.81	242.78	0.008302	9.08	269.47	62.66	0.74
Main	0	FEMA 100-yr	ExCondMultiQ	5547.00	235.07	244.46	243.80	246.56	0.008309	12.46	496.37	84.41	0.80
Main	0	FEMA 100-yr	Proposed Con	5547.00	235.07	244.46	243.80	246.56	0.008309	12.46	496.37	84.41	0.80

Appendix E:

Riprap Sizing Calculations

US Army Corps of Engineers Method 1 (West Consultants, Inc., 1996)

LEGEND	
	User Input
	Excel Output (*Don't Touch!)

$d_{30}/D = SF*C_s*C_v*C_t\ [\{\gamma/(\gamma_s-\gamma)\}^{0.5}*V/(g*D*K)^{0.5}]^{2.5}$

Where:			
	d_{30} =	0.58	riprap size (m) than which 30% of the riprap material is finer
	D =	0.7	average water depth in channel (m)
	SF =	1.5	factor of safety (1.5 suggested for this method)
	V =	3.7	local depth averaged velocity (m/s)
	g =	9.81	acceleration due to gravity (9.81 m/s^2)
	γ =	1000	unit weight of water (1000 kg/m^3)
	γ_s =	2650	unit weight of stone (kg/m^3)
	C_s =	0.3	stability coefficient = 0.30 for angular stones
	C_v =	1	vertical velocity distribution coefficient = 1.0 for straight channels
	C_t =	1	thickness coefficient = 1.0 for riprap thickness equal to d_{100}
	K =	0.743113	side slope correction factor = $[1-\sin^2\theta/\sin^2\varphi)]^{0.5}$
	θ =	26.6	angle of side slope to horizontal
	φ =	42	angle of repose for stone
	d_{50} =	0.69	d_{50} (m) is approximately equal to $1.2*d_{30}$
	d_{50} =	2.28	d_{50} (ft) is approximately equal to $1.2*d_{30}$

θ = 26.6	for 2:1 side slopes	
θ = 21.8	for 2.5:1 side slopes	
θ = 18.4	for 3:1 side slopes	

FROM PROPOSED CONDITIONS HECRAS MODEL

	Depth	Velocity
FT, FPS	2.2	12.2
M, MPS	0.7	3.7

← WORST CASE D/V COMBINATION FROM HEC-RAS ANALYSIS

$2.28' = 27'' \Rightarrow D_{50} = 30''$, $D_{100} = 60''$

$\therefore$ THICKNESS $= D_{100} = 60''$ ✓

Reach	River Sta	Profile	Q Total (cfs)	Min Ch El (ft)	W.S. Elev (ft)	Crit W.S. (ft)	E.G. Elev (ft)	E.G. Slope (ft/ft)	Vel Chnl (ft/s)	Flow Area (sq ft)	Top Width (ft)	Froude # Chl	Depth	Velocity	D - V
Main	827	CTDOT 2-yr	1090	243	246.69	246.55	247.71	0.012172	8.13	134.13	57.5	0.94	3.7	8.1	4.4
Main	827	CTDOT 10-yr	2560	243	249.19	248.3	250.31	0.005917	6.75	296.02	70.3	0.73	6.1	8.8	2.6
Main	827	CTDOT 50-yr	4690	243	251.73	250.14	253.24	0.004163	9.96	486.62	75.94	0.66	8.7	10.0	1.2
Main	827	CTDOT 100-yr	5840	243	252.76	250.96	254.51	0.004031	10.73	566.31	78.24	0.66	9.8	10.7	1.0
Main	827	CTDOT 500-yr	9140	243	255.11	253.11	257.53	0.004049	12.75	759.56	86.58	0.69	12.1	12.8	0.6
															0.0
Main	795	CTDOT 2-yr	1090	242.53	246.16	246.05	247.31	0.012328	8.6	127.04	51.53	0.95	3.6	8.6	5.0
Main	795	CTDOT 10-yr	2560	242.53	248.87		250.12	0.005494	9.09	291.32	64.58	0.71	6.3	9.1	2.8
Main	795	CTDOT 50-yr	4690	242.53	251.36		253.07	0.004509	10.76	459.22	70.32	0.69	8.8	10.8	1.9
Main	795	CTDOT 100-yr	5840	242.53	252.29		254.33	0.004624	11.78	525.81	72.49	0.71	9.8	11.8	2.0
Main	795	CTDOT 500-yr	9140	242.53	254.07	253.11	257.29	0.005741	14.91	658.39	77.56	0.82	11.5	14.9	3.4
															0.0
Main	738	CTDOT 2-yr	1090	241.75	246.23		246.77	0.0038	5.9	185.34	57.44	0.56	4.5	5.9	1.4
Main	738	CTDOT 10-yr	2560	241.75	248.95		249.78	0.002727	7.4	359.45	67.34	0.53	7.2	7.4	0.2
Main	738	CTDOT 50-yr	4690	241.75	251.48		252.74	0.002686	9.25	536.17	72.42	0.55	9.7	9.3	-0.5
Main	738	CTDOT 100-yr	5840	241.75	252.44		253.97	0.00285	10.22	609.3	83.24	0.58	10.7	10.2	-0.5
Main	738	CTDOT 500-yr	9140	241.75	254.51		256.75	0.003301	12.53	794.33	92.14	0.65	12.8	12.5	-0.2
															0.0
Main	660	CTDOT 2-yr	1090	241.24	245.2		246.28	0.009035	8.31	131.19	41.8	0.83	4.0	8.3	4.4
Main	660	CTDOT 10-yr	2560	241.24	247.4	247.16	249.32	0.008673	11.2	236.18	63	0.87	6.2	11.2	5.0
Main	660	CTDOT 50-yr	4690	241.24	250.85		252.46	0.003964	10.71	488.79	83.4	0.64	9.6	10.7	1.1
Main	660	CTDOT 100-yr	5840	241.24	252		253.71	0.003656	11.38	589.63	91.03	0.63	10.8	11.2	0.4
Main	660	CTDOT 500-yr	9140	241.24	254.26		256.48	0.003715	12.96	804.53	99.98	0.66	13.0	13.0	-0.1
															0.0
Main	595	CTDOT 2-yr	1090	239.96	244.83		245.72	0.006798	7.65	142.43	42.3	0.74	4.8	7.7	2.8
Main	595	CTDOT 10-yr	2560	239.96	247.03		248.75	0.007167	10.53	245.21	50.24	0.81	7.1	10.5	3.5
Main	595	CTDOT 50-yr	4690	239.96	250.74		252.18	0.003218	10.06	520.05	81.32	0.59	10.8	10.1	-0.7
Main	595	CTDOT 100-yr	5840	239.96	251.84		253.47	0.003184	10.81	613.71	96.21	0.6	11.9	10.8	-1.1
Main	595	CTDOT 500-yr	9140	239.96	254.1		256.23	0.003369	12.73	867.52	127.49	0.64	14.1	12.7	-1.4
															0.0
Main	518	CTDOT 2-yr	1090	239.53	243.55	243.55	244.96	0.013399	9.51	114.6	41.1	1	4.0	9.5	5.5
Main	518	CTDOT 10-yr	2560	239.53	246.85		248.15	0.00531	9.22	285.34	73.68	0.71	7.3	9.2	1.9
Main	518	CTDOT 50-yr	4690	239.53	250.96		251.84	0.001854	7.98	663.38	103.39	0.46	11.4	8.0	-3.5
Main	518	CTDOT 100-yr	5840	239.53	252.14		253.1	0.001757	8.41	788.54	107.94	0.46	12.6	8.4	-4.2
Main	518	CTDOT 500-yr	9140	239.53	254.41		255.83	0.002079	10.41	1068.9	150.18	0.51	14.9	10.4	-4.5
															0.0
Main	492	CTDOT 2-yr	1090	239.8	242.02	242.7	244.31	0.039288	12.15	89.73	50.95	1.61	2.2	12.2	9.9
Main	492	CTDOT 10-yr	2560	239.8	247.26		247.86	0.001855	6.3	424.43	81.36	0.43	7.5	6.3	-1.2
Main	492	CTDOT 50-yr	4690	239.8	251.13		251.72	0.001046	6.43	795.55	102.46	0.35	11.3	6.4	-4.9
Main	492	CTDOT 100-yr	5840	239.8	252.3		252.99	0.001069	6.97	917.74	105.67	0.36	12.5	7.0	-5.5
Main	492	CTDOT 500-yr	9140	239.8	254.61		255.69	0.001357	8.86	1211.37	159.55	0.42	14.8	8.9	-6.0
															0.0
Main	426	CTDOT 2-yr	1090	237.24	243.31	239.68	243.43	0.000511	2.82	386.29	70.72	0.21	6.1	2.8	-3.2
Main	426	CTDOT 10-yr	2560	237.24	247.49		247.69	0.000402	3.66	720.77	93.1	0.21	10.3	3.7	-6.6
Main	426	CTDOT 50-yr	4690	237.24	251.3		251.59	0.000371	4.38	1104.24	105.01	0.21	14.1	4.4	-9.7
Main	426	CTDOT 100-yr	5840	237.24	252.49		252.85	0.000412	4.89	1230.81	107.9	0.22	15.3	4.9	-10.4
Main	426	CTDOT 500-yr	9140	237.24	254.9		255.48	0.000565	6.32	1563.99	194.02	0.27	17.7	6.3	-11.3
															0.0
Main	407	CTDOT 2-yr	1090	236.41	243.34		243.41	0.000201	2.01	541.77	81.2	0.14	6.9	2.0	-4.9
Main	407	CTDOT 10-yr	2560	236.41	247.54		247.67	0.000221	2.87	905.31	106.71	0.15	11.1	2.9	-8.3
Main	407	CTDOT 50-yr	4690	236.41	251.36		251.55	0.000236	3.6	1336.01	116.36	0.17	15.0	3.6	-11.4
Main	407	CTDOT 100-yr	5840	236.41	252.56		252.81	0.00027	4.05	1477.15	118.79	0.18	16.2	4.1	-12.1
Main	407	CTDOT 500-yr	9140	236.41	255		255.43	0.000376	5.26	1857.59	197.24	0.22	18.6	5.3	-13.3
															0.0
Main	378	CTDOT 2-yr	1090	235.4	243.32		243.4	0.000208	2.27	483.29	70.52	0.15	7.9	2.3	-5.6
Main	378	CTDOT 10-yr	2560	235.4	247.49		247.66	0.000245	3.33	804.48	99.76	0.17	12.1	3.3	-8.8
Main	378	CTDOT 50-yr	4690	235.4	251.29		251.54	0.00025	4.06	1206.32	115.43	0.18	15.9	4.1	-11.8
Main	378	CTDOT 100-yr	5840	235.4	252.47		252.8	0.000284	4.55	1351.09	130.42	0.2	17.1	4.6	-12.5
Main	378	CTDOT 500-yr	9140	235.4	254.88		255.41	0.000387	5.82	1754.76	201.11	0.24	19.5	5.8	-13.7
															0.0
Main	361	CTDOT 2-yr	1090	235.5	243.17	239.66	243.39	0.000744	3.66	298.04	50.22	0.26	7.7	3.7	-4.0
Main	361	CTDOT 10-yr	2560	235.5	247.24	241.55	247.63	0.00074	5.03	520.35	83.71	0.26	11.7	5.0	-6.7
Main	361	CTDOT 50-yr	4690	235.5	251.13	243.71	251.52	0.00048	5.08	942.65	128.81	0.24	15.6	5.1	-10.6
Main	361	CTDOT 100-yr	5840	235.5	252.33	244.71	252.78	0.000481	5.32	1107.52	146.74	0.24	16.8	5.3	-11.5
Main	361	CTDOT 500-yr	9140	235.5	254.82	246.84	255.4	0.000463	5.79	1542.13	187.23	0.24	19.3	5.8	-13.5

	Depth	Velocity	D-V
min	2.2	2.0	-13.7
max	19.5	14.9	9.9
median	10.8	8.1	-0.2
mean	10.7	7.8	-2.5

PARTIAL HEC-RAS RESULTS FOR CTDOT 2- 500 yr Q's

WORST CASE D/V COMBINATION USED FOR RIPRAP SIZING (CONSERVATIVE)

Appendix F:

Pipe Flow Calculations

Manning's Calculation for Circular Pipe Section
Temporary Bypass Pipes
Middle Street Dam Removal
Bristol, CT

Input

Slope	= 0.0012 ft/ft
'n' value	= 0.015
Diameter	= 48 in.
Depth of flow	= 48.0 in.

Output

Hydr Radius	=	1.00
Area	=	12.57 sq.ft.
Velocity	=	3.40 fps
Capacity	=	43.12 cfs

Two (2) 48" HDPE pipes = 86 cfs capacity

~ 90th % Q FOR 3rd QUARTER (JUN - SEP) = ~ 80 CFS

∴ CAPACITY EXCEEDED ONLY 10% OF MEDIAN YEAR DURING TIME OF CONSTRUCTION ✓

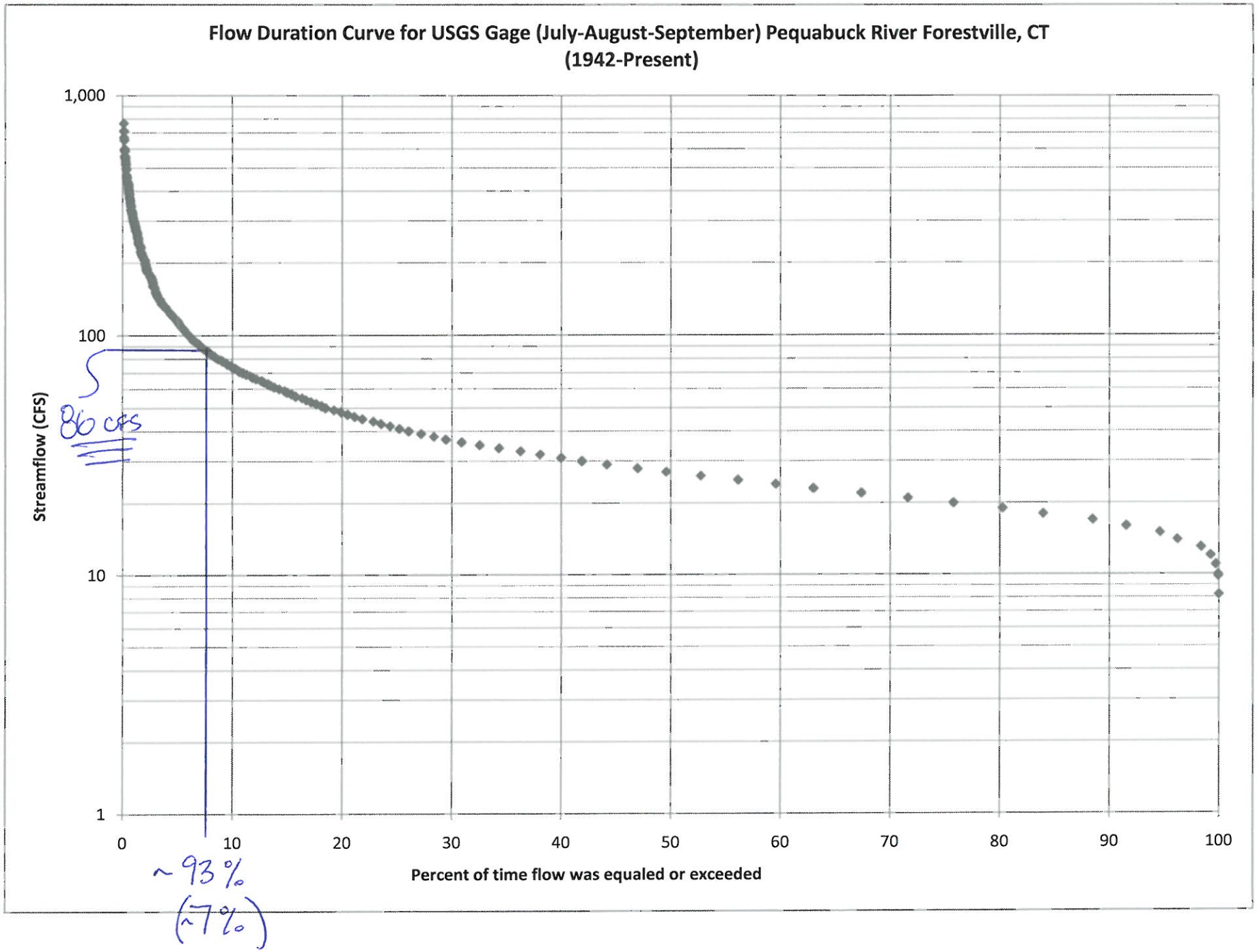
Flow Duration Curve for USGS Gage (July-August-September) Pequabuck River Forestville, CT
(1942-Present)
1,000
100
10
1
Streamflow (CFS)
86 cfs
0
10
20
30
40
50
60
70
80
90
100
Percent of time flow was equaled or exceeded
~93%
(~7%)

Externally Attached

Engineering Design Plans